

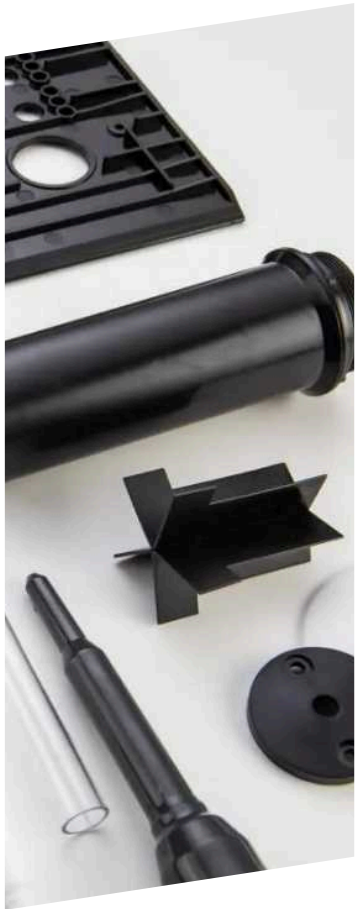

The Complete Guide

to Injection Molding Part Design

A practical reference for engineers and product designers — showing how part design, mold design, and DFM fit together, then covering material selection, feature-by-feature part geometry, surface finish standards, and the secondary operations that turn a molded part into a finished product.

CONTENTS

01 Understanding Injection Molding Design 1

02 Injection Molding Design Considerations 4

03 Materials Selection 7

04 Parts Design Guide 15

05 Mold Surface Finish Standards 55

06 Secondary Operations 61

07 Zhongde Custom Manufacturing 66

08 About Zhongde 70

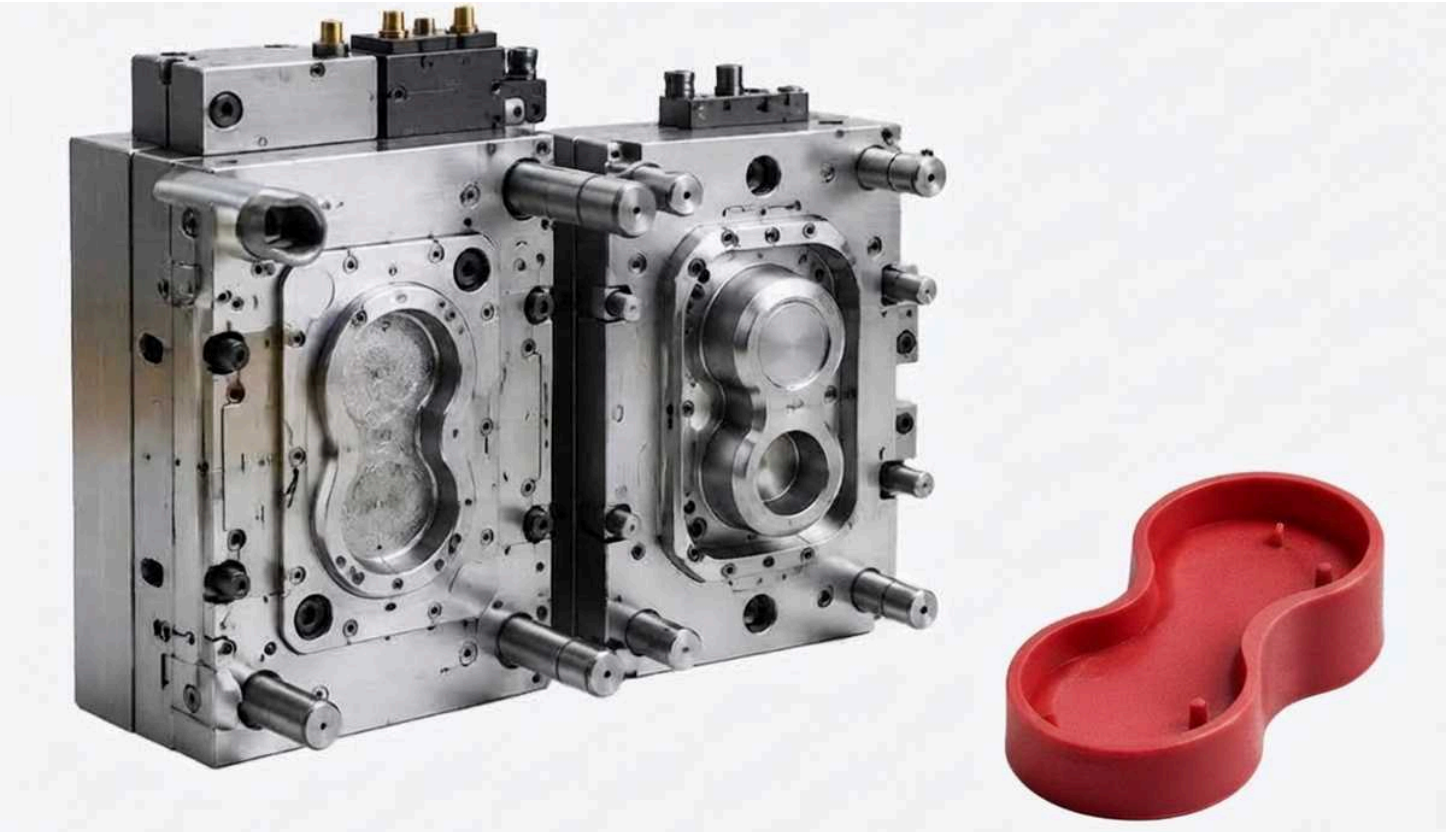

"Injection molding design" is a phrase that can refer to at least three different aspects: designing the plastic part, designing the mold that shapes it, and ensuring that the part and mold designs worktogether effectively through Design for Manufacturing (DFM). Much of the confusion in this field begins at the boundary between these areas.

This guide aims to clarify these relationships with a practical framework for understanding how part design, mold design, and DFM connect — what each area is responsible for and where those responsibilities transition.

With this foundation established, the guide focuses on the practical decisions engineers face during part development. It covers feature-by-feature design guidance for common injection molded geometries, including wall thickness, draft angles, ribs, bosses, snap-fits, and more, along with the key parameters and considerations that help create parts that are functional, manufacturable, and ready for production.

01 Understanding Injection Molding Design:

Part Design, Mold Design, and DFM

Injection molding is the manufacturing process itself: molten plastic is injected under pressure into a closed mold cavity, packed to compensate for material shrinkage, then cooled until it solidifies before being ejected as a finished part. This is the manufacturing side of the process — involving machines, pressure, temperature, cooling behavior, and cycle time.

Injection molding design, by contrast, is not a single discipline. It is an umbrella term that people use to describe at least two distinct — but deeply interdependent — activities: part design and mold design. A third discipline, Design for Manufacturability (DFM), sits across both — reviewing part and mold decisions together to catch manufacturing issues before tooling begins.

Part design

Defines what the product needs to be: its geometry, wall thickness, features, and functional requirements.

Mold design

Defines the tooling required to produce that geometry: cavity and core layout, parting surfaces, gates, runners, cooling systems, and ejection mechanisms. On paper, the separation looks clear. In practice, it rarely is — and here's why.

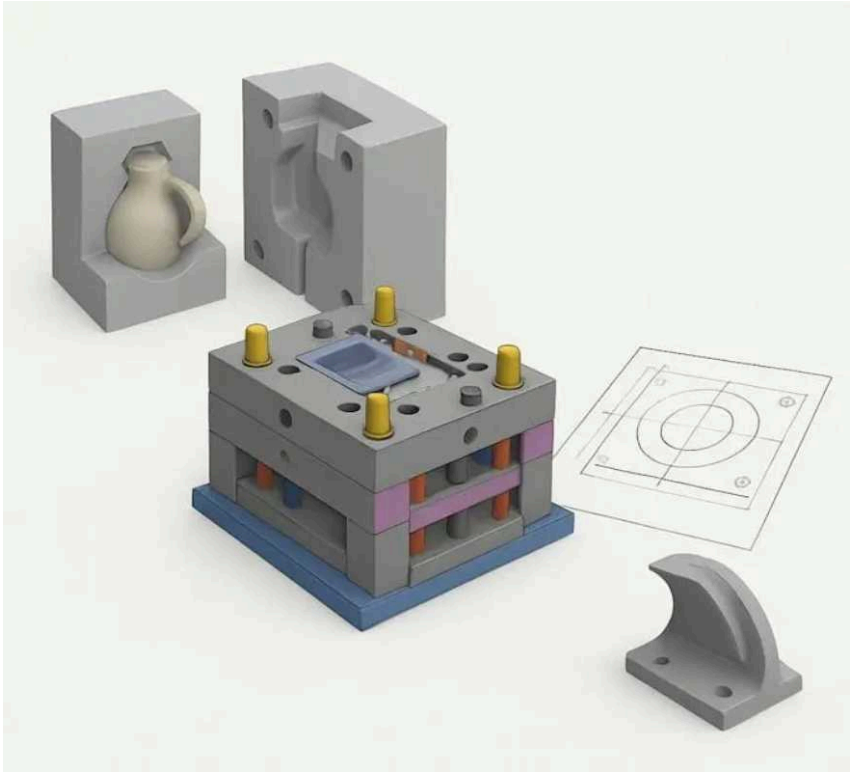

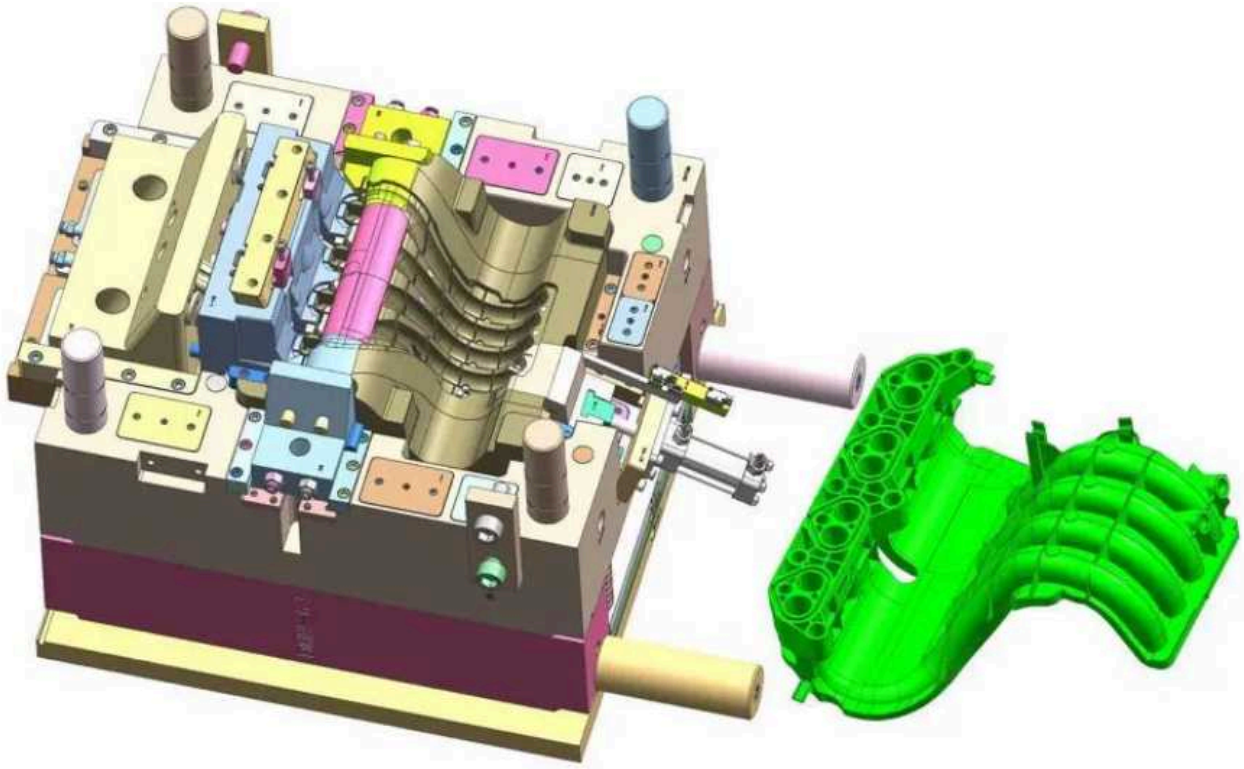

Figure 1. Mold and Molded Part

A part cannot be designed independently from the mold that will produce it. Every geometric decision made by a part designer either simplifies or complicates the tooling process. A rib placed in an unsuitable direction may create an undercut condition or require additional tooling features. A wall that changes too abruptly in thickness can lead to uneven cooling behavior and influence how the mold's cooling strategy is designed. The part designer is not simply drawing a shape — they are making decisions that directly affect the tool.

Conversely, a mold cannot be designed without decisions that feed directly back into the part. The clearest example is the parting line — the boundary where the mold halves meet and separate.

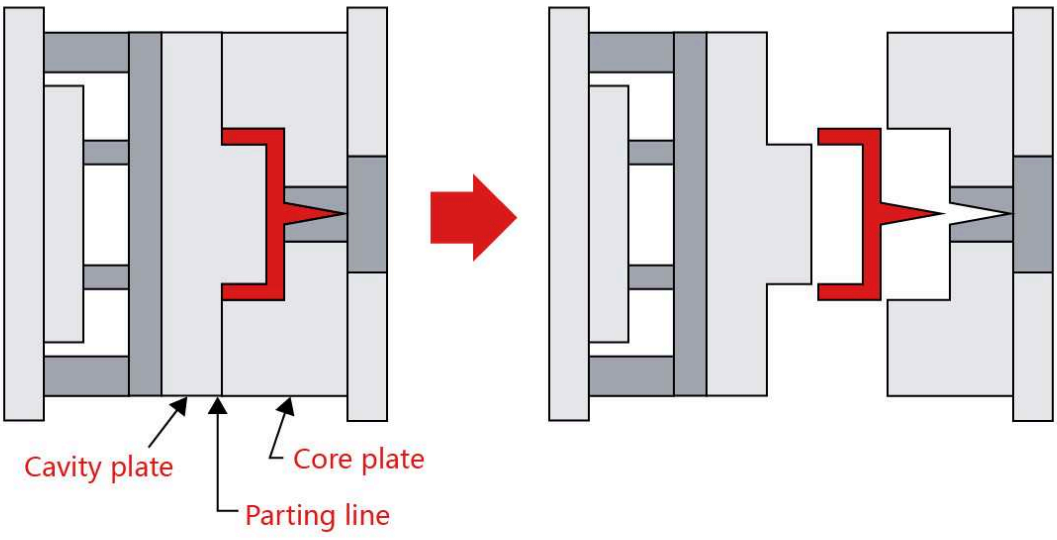

Figure 2. Mold Parting Line

Where this line falls is fundamentally a tooling decision, determined by factors such as mold opening direction, ejection requirements, and part geometry. However, it appears as a visible feature on every molded part and directly constrains part design: it affects where draft angles are required, where undercuts become challenging, and where a visible seam is acceptable. You cannot define aneffective parting line without understanding the part's geometry, and you cannot finalize the part's geometry without considering where the parting line will be located.

This is the real reason these terms often become tangled: part design and mold design are not simply sequential steps passed from one team to another. They form an iterative process in which decisions on one side often require adjustments on the other. Experienced designers continuously balance two questions: "What does this part need to do?" and "How will this affect the tool?"

DFM (Design for Manufacturability) works across this loop as a discipline of its own — a systematic review of part and mold decisions against the practical requirements of the injection molding process.

Its purpose is to identify potential manufacturing issues before tooling begins and prevent costly changes after the mold is built. We will return to DFM in detail later in this guide.

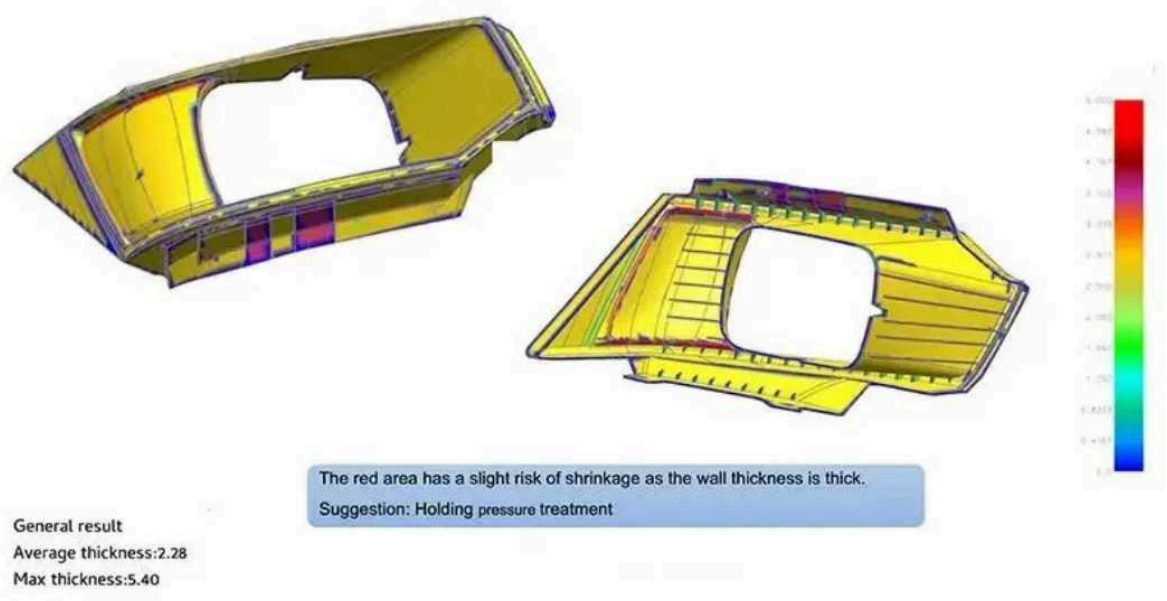

Figure 3. DFM review of a molded part design

For now, the practical takeaway is simple: when this guide refers to a design rule — such as draft angle, wall thickness, or rib proportions — understand that these recommendations exist at the intersection of two worlds. They are presented as part-design guidelines, but they are ultimately shaped by how molds are built and how plastic behaves during the molding process.

02 Injection Molding Design Considerations

Every design decision ultimately serves a specific product function — a part exists to perform aspecific task, and everything else is a balance between competing requirements. Designers often find themselves trading off performance against manufacturability: a geometry that performs ideally maybe difficult or expensive to mold, while a geometry that molds easily may not deliver the same level of performance.

The factors that shape these trade-offs are numerous and often interconnected, but they can generally be reduced to a few core questions: What is this part designed to do? Can it be manufactured reliably? And beyond those two, what other requirements does it need to satisfy?

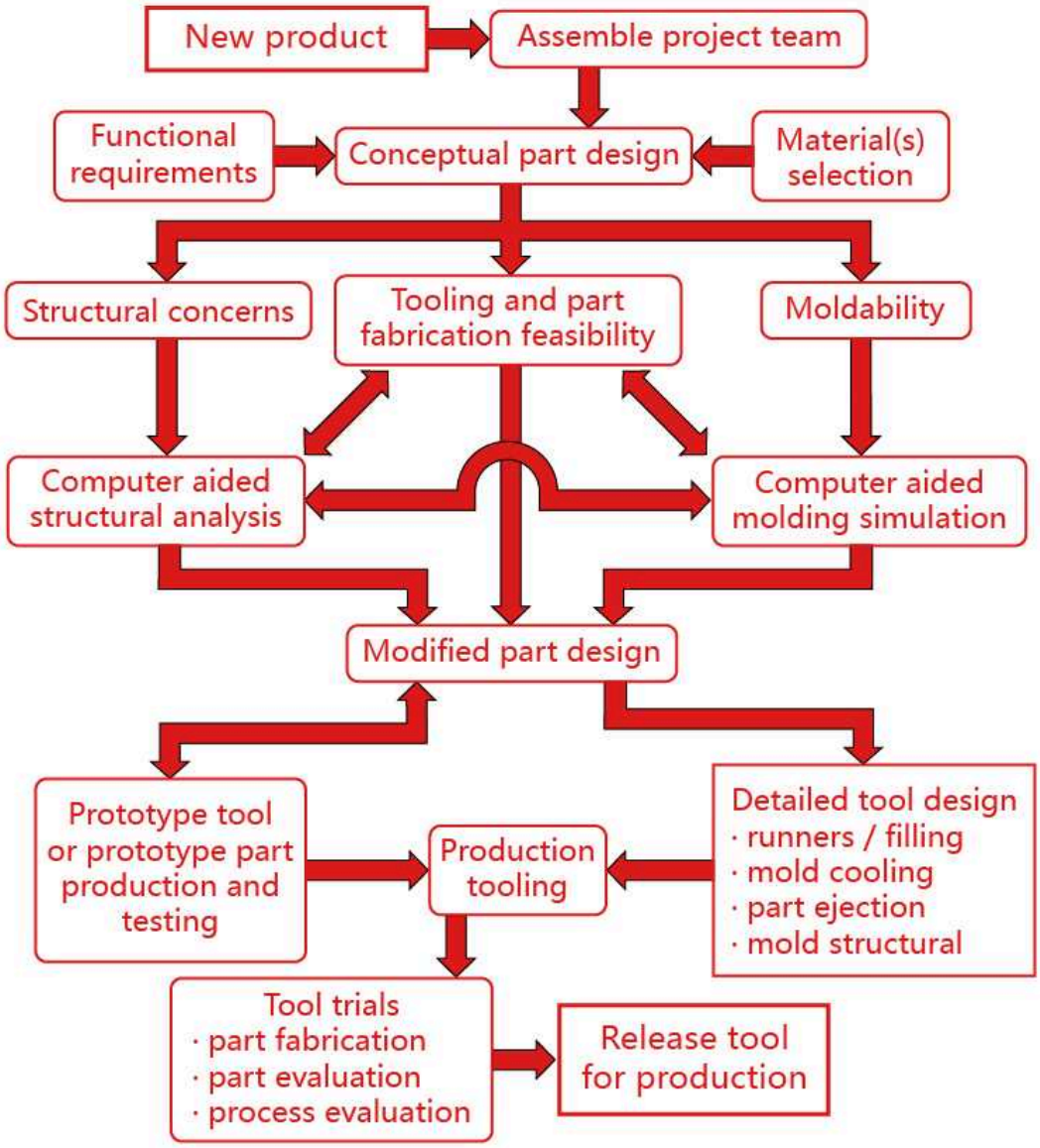

1. Mechanical Performance

A part has to survive the loads it will actually experience in use, and "load" can mean very different things depending on the application. A phone case is engineered around impact events it may rarely experience; a living-hinge lid on a cosmetics container is engineered around thousands of opening and closing cycles it is expected to withstand. These requirements directly influence geometry, wall thickness, rib placement, and material selection — decisions we'll return to throughout this guide.

2. Environmental Resistance

Few parts live in a climate-controlled environment. An outdoor enclosure has to tolerate UV exposure without becoming brittle; an under-hood automotive component has to survive sustained heat and vibration; a part used in a chemical processing facility may require resistance to solvents that would otherwise cause environmental stress cracking or swelling. Each environment points toward a different material family — and often a different geometry, since a part exposed to repeated thermal cycling, for example, may require smoother wall thickness transitions to reduce stress concentrations caused by material expansion and contraction.

3. Dimensional Accuracy and Tolerances

Some dimensions on a part are function-critical, meaning another component depends on them for proper fit or operation — a boss that must align with a mating screw, or a snap-fit that must engage with the correct retention force. Others are primarily cosmetic and can vary by a few tenths of a millimeter without affecting performance. Treating every dimension as equally critical is expensive: tight tolerances require more precise tooling and tighter control of shrinkage and warpage. The more useful approach is identifying early which dimensions truly matter and which do not.

4. Assembly and Part Interaction

Very few injection molded parts perform their function completely on their own. A snap-fit has to mate with a specific mating feature; a boss has to align with a screw and a mating hole in another component; a housing has to close around a PCB with just enough clearance and no more.

A part's role within the larger assembly — what it connects to, how it is installed, whether it needs to be removed for service — shapes feature decisions long before wall thickness or draft angle are finalized.

5. Aesthetics and Surface Finish

For visible parts, appearance is a functional requirement in its own right. Cosmetic surface requirements, consistency of color and gloss across production runs, and the visibility of unavoidable process features — gate marks, ejector pin marks, weld lines, and the parting line itself — all need to be considered deliberately rather than left to chance. What is cosmetically acceptable on an internal structural bracket may be unacceptable on an external, customer-facing surface, and that distinction should be defined early.

6. Part Lifespan and Duty Cycle

The required service life of a part shapes design decisions long before the geometry is finalized. A single-use disposable component, a consumer product expected to last five years, and an industrial component expected to last twenty years all justify fundamentally different decisions — on material grade, wall thickness margins, and how much variation is acceptable in production.

Duty cycle compounds this: a part actuated once a day ages very differently over its service life than one actuated once a minute, even if both are designed to withstand the same number of operating cycles.

7. Cost and Production Volume

The right design answer at 500 units is often the wrong one at 500,000. A prototype run can absorb a more expensive, simpler mold and looser tolerances; a high-volume consumer product can't afford the cycle time or scrap rate that a low-volume design tolerates. Expected volume should shape decisions about tooling complexity, material grade, and even which features are worth designing around versus simplifying away.

8. Regulatory and Industry Compliance

Certain applications come with constraints established before the first sketch is drawn. A part destined for food contact needs an FDA-compliant resin. A part inside a consumer electronics enclosure may need to meet a specific UL flammability rating. A medical device housing may require biocompatibility evaluation according to ISO 10993. These requirements can eliminate entire material families at the beginning of the design process and, by extension, limit certain wall thickness strategies or manufacturing approaches that depend on those excluded materials.

03 Materials Selection

Nearly every consideration discussed in the previous section eventually leads back to one decision: which material should the part be molded from. That's not a coincidence — it follows directly from how the injection molding process works. The achievable geometry, wall thickness, and dimensional accuracy of a part are all influenced and often limited by how a given resin behaves as it flows, packs, and shrinks inside the mold. At the same time, these flow and shrinkage characteristics strongly influence cycle time, defect risk, and ultimately how consistently the part can be produced at volume.

Material selection sits at the center of nearly every trade-off discussed so far — which is why it deserves its own close look before we get into part geometry.



Mechanical Properties

Tensile strength, flexural modulus, and impact resistance determine whether a part can survive the loads discussed in the previous section. These properties often trade off against each other: a highly rigid engineering resin may provide excellent stiffness but may not be the best choice for applications where impact absorption is critical. A tougher resin with greater ductility may perform better in those conditions, even if it sacrifices some rigidity. Material selection is therefore not about maximizing a single property, but about choosing the right balance for the application's actual loading conditions.

Chemical and Environmental Resistance

Resistance to UV, moisture, and chemical exposure varies by resin family, sometimes drastically. Nylon, for instance, absorbs moisture from the air and can change dimensionally as a result — a real concern for parts requiring tight tolerances in humid environments. Polycarbonate provides excellent impact resistance but can degrade under prolonged UV exposure unless it is specifically stabilized for outdoor applications.

Melting Temperature and Processing Window

Every resin has a recommended processing range, and the width of this range affects both mold design and production consistency. Materials with a narrower processing window, such as POM(acetal), require tighter control of parameters such as melt temperature, injection speed, and residence time. Poor processing conditions can increase the risk of degradation, dimension alvariation, and inconsistent part quality.

This is one reason material selection and mold design cannot be finalized independently of each other.

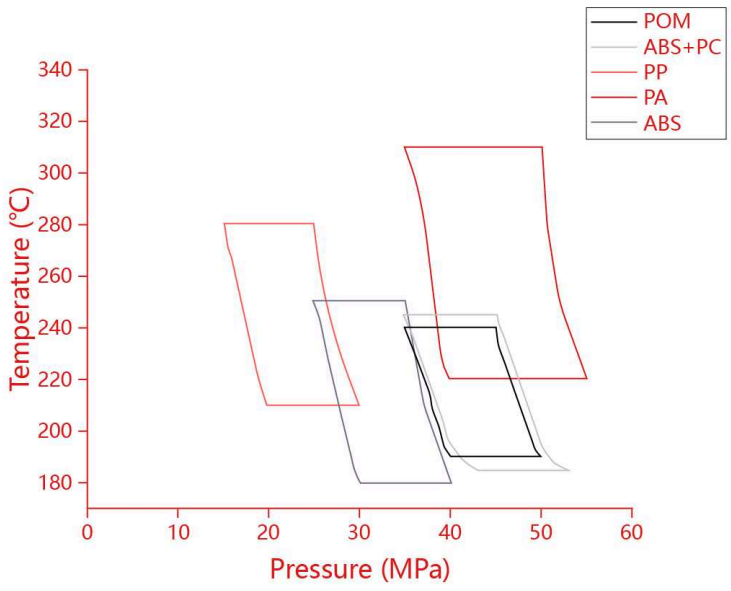

Figure 4. Material processing window and molding stability

Flow Characteristics (Melt Flow Rate)

A resin's melt flow rate indicates how easily it flows under standardized test conditions and provide san initial reference for injection molding behavior. However, actual filling performance also depends on factors such as injection pressure, mold temperature, shear rate, and part geometry.

A high-flow grade can help fill thin-walled parts with long flow paths without excessive injection pressure, while a lower-flow grade may be better suited for thicker, simpler parts but struggle to fill thin sections before the material cools and freezes. Flow characteristics directly influence wall thickness decisions — a material with limited flow capability may require a thicker minimum wall than the part would otherwise need structurally.

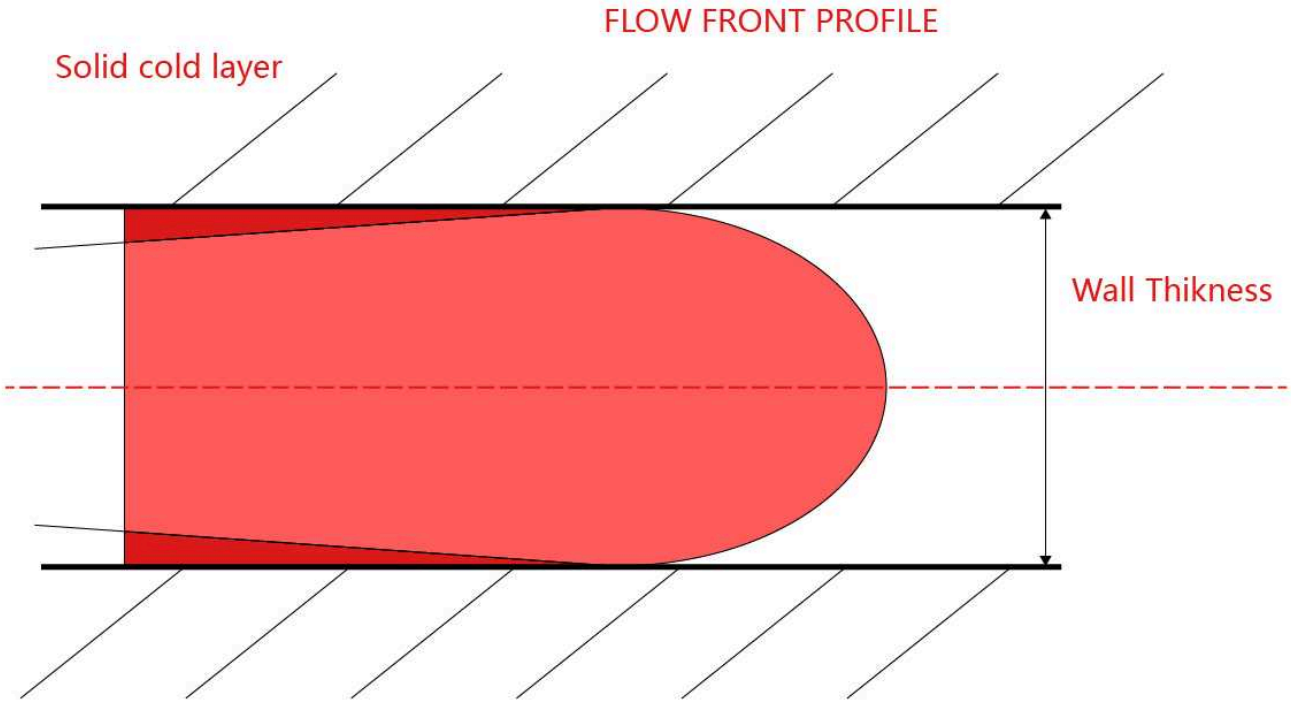

Figure 5. Material flow behavior affects filling capability

Shrinkage Rate

All plastics shrink as they cool from a molten state to a solid state, but the amount and direction of shrinkage vary by resin type and processing conditions.

Semi-crystalline materials such as polypropylene and nylon generally shrink more than amorphous materials such as ABS and polycarbonate. They may also show greater differences in shrinkage along and across the flow direction, increasing the risk of warpage.

Shrinkage affects more than part dimensions — it directly influences mold design because the cavity dimensions must compensate for the expected material contraction.

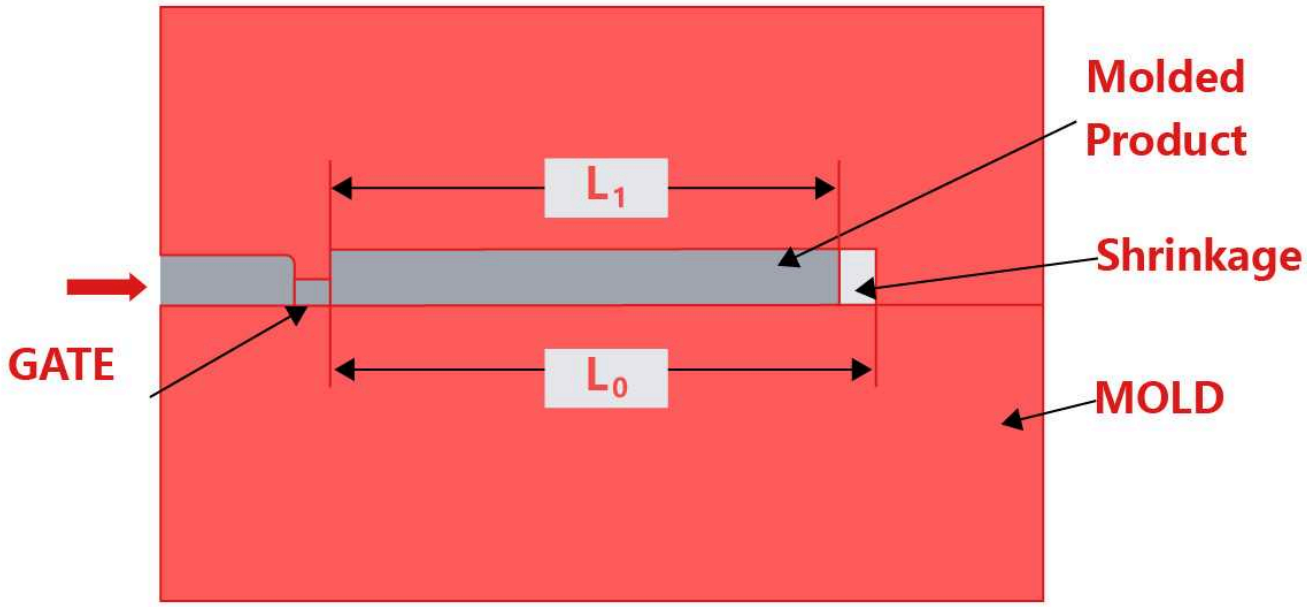

Figure 6. Mold compensation for material shrinkage

Thermal Properties

A material's thermal properties determine whether a part can maintain its shape and performance under operating conditions. Heat deflection temperature (HDT), glass transition temperature (Tg), melting point, and long-term thermal stability all influence the usable temperature range of a molded part.

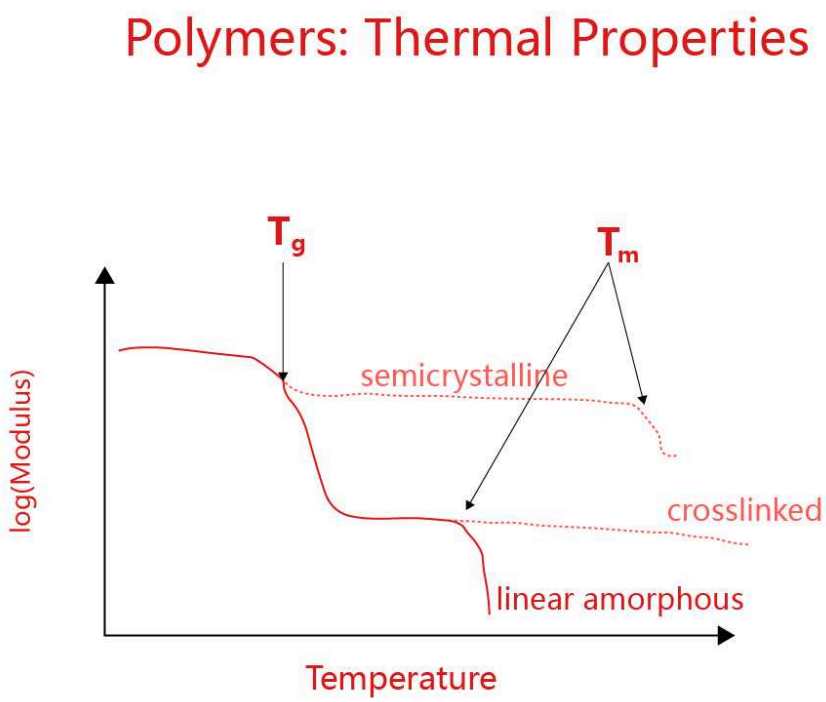

Figure 7. Relationship between key thermal properties of polymers

For example, a polypropylene component used near an automotive engine may lose dimensional stability under sustained heat exposure, while materials such as PPS or glass-filled nylon can provide better performance in high-temperature environments.

Cost and Availability

Two materials with similar mechanical properties can carry very different price tags depending on global supply, demand, and availability. Material cost is also not simply a matter of price per kilogram— a cheaper resin with lower flow capability may require slower cycle times, more conservative wall thickness, or additional processing considerations, which can eliminate the initial savings once total production cost is considered.

Common Materials at a Glance

The table below summarizes commonly used injection molding resins and the key properties that influence material selection, including shrinkage, processing temperature, and heat resistance. Values are typical ranges and may vary depending on resin grade, additives, and molding conditions.

Material	Typical Shrinkage	Melt Temp. Range	HDT (0.45 MPa)	Notable Traits
Polypropylene (PP)	1.5–2.5%	200–280°C	~100°C	Fatigue-resistant; lowcost; chemical-resistant
ABS	0.4–0.7%	220–260°C	~95–100°C	Balanced stiffness, impact strength, easy processing
Polycarbonate (PC)	0.5–0.7%	280–320°C	~130–140°C	High impact; optical; stress-sensitive
Polyamide/ Nylon (PA 6, PA 66)	0.8–2.5%	230–290°C	~65–200°C (grade-dependent)	High strength; wear-resistant; moisture-sensitive
Polyethylene (PE, HDPE)	1.5–4.0%	200–280°C	~45–50°C	Chemical resistance; toughness; low stiffness
Polystyrene (PS)	0.3–0.6%	180–260°C	~70–100°C	Low cost; easy processing; brittle
POM (Acetal)	1.8–2.5%	190–230°C	~110–160°C	Low friction; dimensional stability; processing sensitive

Common Additives Related to Part Design

Additives rarely change what a material is called on a drawing, but they can significantly change how a part should be designed and processed. A part specified as "ABS" and a part specified as "30% glass-filled ABS" may require different wall thicknesses, draft angles, tolerances, and surface finish expectations — even though both are based on the same resin family.

Glass Fiber Reinforcement

Adding glass fiber to a base resin can significantly increase stiffness, strength, and heat resistance, which may allow designers to reduce wall thickness or rib size compared with an unfilled grade. However, these benefits introduce new design considerations.

Glass-filled resins typically exhibit anisotropic shrinkage: shrinkage along the fiber flow direction differs from shrinkage perpendicular to the flow direction. This behavior increases the risk of warpage, especially in flat parts with long flow paths.

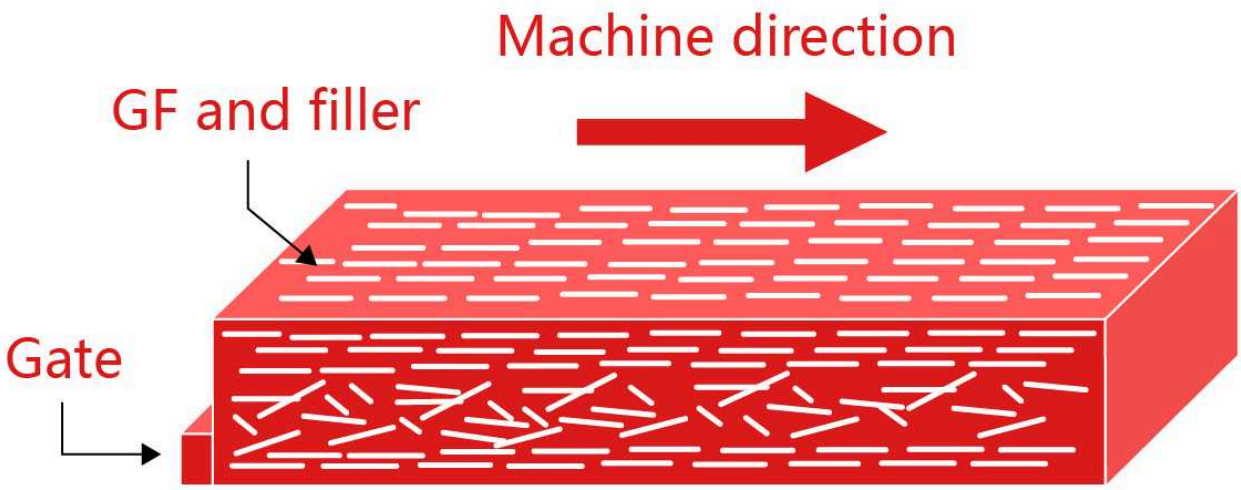

Figure 8. Fiber orientation and anisotropic shrinkage

Glass fibers can also affect surface appearance and reduce flexibility. The exposed fibers may create a rougher texture, while features that depend on repeated flexing — such as living hinges and snap-fits — may become more prone to cracking.

Flame Retardants

Flame-retardant additives are typically introduced to meet specific safety requirements (see the Regulatory and Industry Compliance section discussed earlier). However, they may alter processing behavior and reduce flow or impact performance compared with the unmodified resin.

A part originally designed around the flow and mechanical properties of a standard grade may require adjustments to wall thickness, gate location, or processing parameters after switching to a flame-retardant grade.

Impact Modifiers

Impact modifiers improve a resin's toughness by increasing its ability to absorb energy before failure, often with some reduction in stiffness or heat resistance.

This trade-off matters most for parts that rely on rigidity as part of their function. A structural component, snap-fit arm, or enclosure feature designed around a higher-stiffness grade may require geometry adjustments when using an impact-modified version of the material.

Colorants and Master Batches

Color is not always purely cosmetic. Certain pigments and additives, particularly carbon black, can influence heat absorption, cooling behavior, and the visibility of surface defects.

For parts with strict cosmetic requirements or tight dimensional fits, color selection should be considered early in the design process. Changing masterbatch formulations late in development can slightly alter material behavior and affect dimensions that were already optimized.

04 Parts Design Guide

This chapter is the core of the guide — a feature-by-feature exploration of the geometric decisions that shape almost every injection molded part. Wall thickness, draft, corners, ribs and bosses, gussets, transitions, undercuts, threads, holes, living hinges, and snap-fits each have their own design considerations, but none of them exist independently. The success of one feature often depends on how it interacts with the rest of the part.

Some principles will appear repeatedly throughout this chapter because their influence extends far beyond a single feature. Wall thickness is the clearest example. It affects not only filling, cooling, and shrinkage behavior, but also the design of ribs, bosses, snap-fits, and transitions around the part. A well-designed feature can still create defects if it introduces unnecessary material accumulation nearby. For this reason, controlling wall thickness is not just one design rule among many — it is the foundation behind many others.

Draft angles and corner design follow a similar logic. Draft is not a special feature added only when ejection becomes a problem; it is a basic requirement wherever part geometry must separate from the mold. Likewise, sharp internal corners may seem harmless during CAD modeling, but they create stress concentrations that influence the durability of many different features. Understanding these recurring principles makes the individual guidelines in the following sections easier to apply.

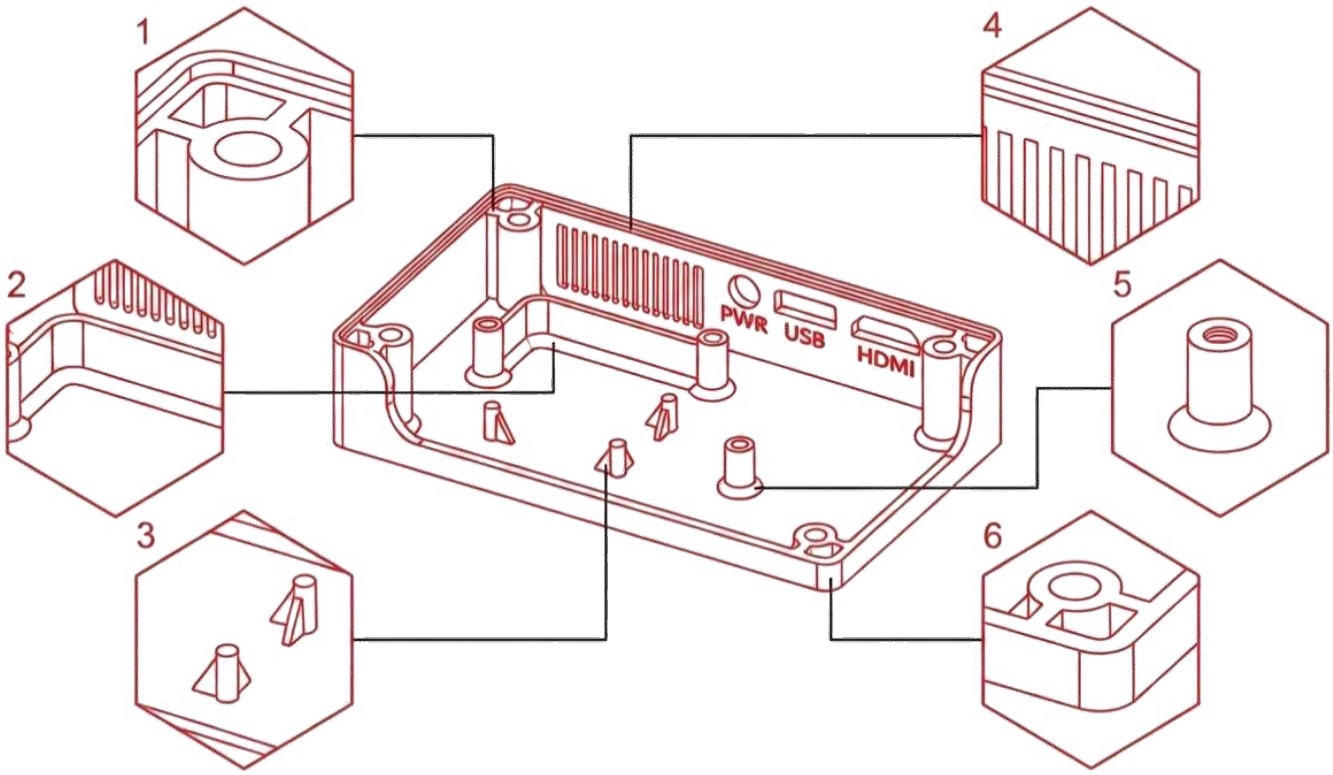

Wall Thickness

Wall thickness refers to the nominal thickness of the plastic material at any given cross-section of a part. It's typically the single most consequential dimension in a design — it governs how the part fills, cools, shrinks, and performs mechanically, and nearly every other geometric feature in this guide is proportioned relative to it.

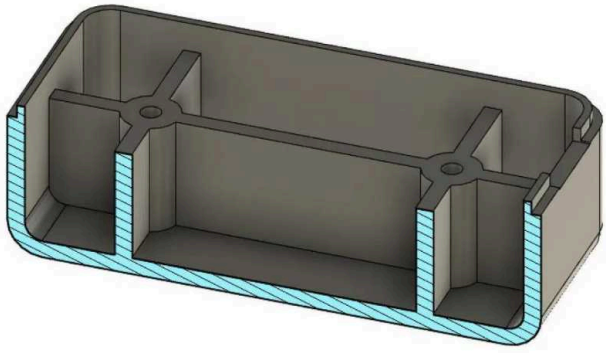

Figure 9. Nominal wall thickness of an injection molded part

How to Approach the Calculation

There is no universal formula that produces the "correct" wall thickness for every part. The final value is usually determined by balancing flow requirements, structural needs, and the behavior of the selected resin.

One important factor is the flow length-to-thickness ratio (L/T ratio): the distance molten plastic travels from the gate divided by the wall thickness along that flow path. Every resin has a practical filling limit, often expressed as an L/T ratio, beyond which the material may cool and solidify before the cavity is completely filled, resulting in short shots or incomplete features.

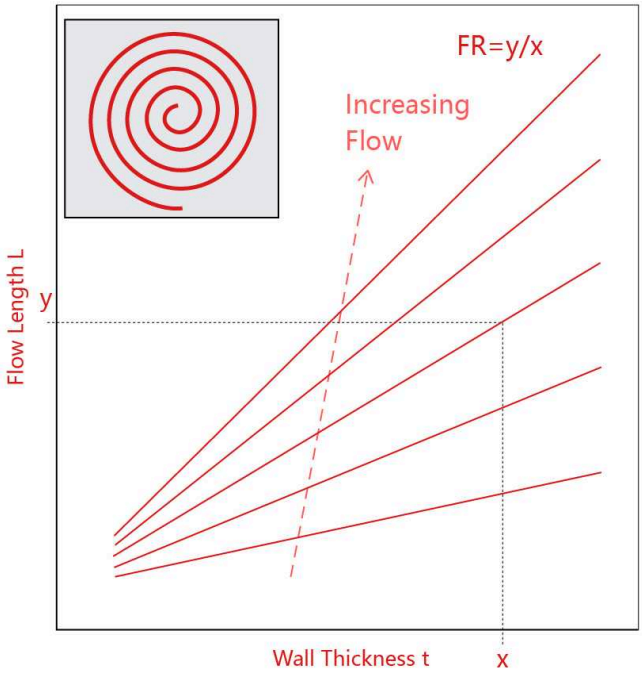

Figure 10. shcematic flow length vs. wall thickness plot

Typical values may range from approximately 100:1 to 350:1 depending on the resin grade, mold design, and processing conditions. A thin wall is therefore not only a structural decision — it is also a decision about whether the material can physically reach every part of the cavity before freezing.

The second consideration is local thickness variation. Thick sections cool more slowly than thin sections and shrink more as they solidify, which creates the conditions for sink marks, voids, and warpage. This is why features such as ribs and bosses are typically designed thinner than the wall they attach to. As a general guideline, their thickness is often kept around 50–60% of the nominal wall thickness to reduce visible sink marks on the opposite surface.

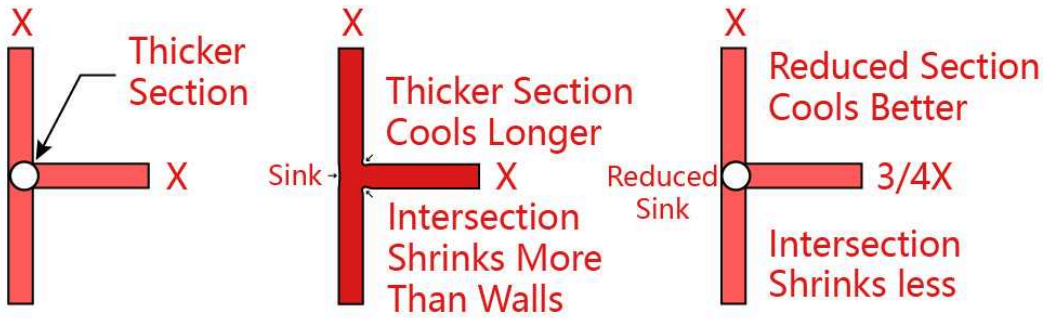

Figure 11. Excessive local thickness causes sink marks

In practice, these two checks answer different questions: the L/T ratio determines whether the part can be filled, while local thickness control determines whether the molded part will remain visually and dimensionally stable after cooling.

Recommended Wall Thickness by Material

Material	Recommended Range	Typical Nominal
Polypropylene (PP)	0.8–3.8 mm	~1.5–2.0 mm
ABS	1.2–3.5 mm	~2.0–2.5 mm
Polycarbonate (PC)	1.5–4.0 mm	~2.5–3.0 mm
Polyamide / Nylon (PA6, PA66)	0.9–3.0 mm	~1.5–2.5 mm
Polyethylene (PE, HDPE)	0.9–4.0 mm	~1.5–2.5 mm
Polystyrene (PS)	0.9–3.5 mm	~1.5–2.0 mm
POM (Acetal)	0.8–3.0 mm	~1.5–2.0 mm
PC/ABS Blend	1.2–3.5 mm	~2.0–2.5 mm
TPU/TPE	0.8–3.0 mm	~1.5–2.5 mm
PMMA (Acrylic)	1.5–4.0 mm	~2.5–3.0 mm

Practical Guidelines

- **Keep wall thickness as uniform as possible across the part.** Uniformity, rather than minimum thickness alone, is what controls cooling behavior, shrinkage, warpage, and sink marks.
- **Where thickness changes are necessary, use gradual transitions instead of abrupt steps.** Sudden changes in material volume create uneven cooling and increase stress concentration.
- **Do not add thickness simply for strength.** Properly designed ribs, gussets, and other reinforcing features often provide better stiffness with less material and shorter cycle times.
- **Pay close attention to isolated thick sections.** Localized material accumulation is a common cause of sink marks, voids, and extended cooling time.
- **Validate thin-wall designs with mold flow analysis** before tooling.

Draft

Draft is the slight taper applied to part surfaces that are parallel or nearly parallel to the mold opening direction, allowing the molded part to release cleanly from the cavity or core during ejection. Without sufficient draft, these surfaces remain in contact with the mold over their full height, increasing friction and vacuum effects that can damage the surface finish, deform the part, or complicate ejection.

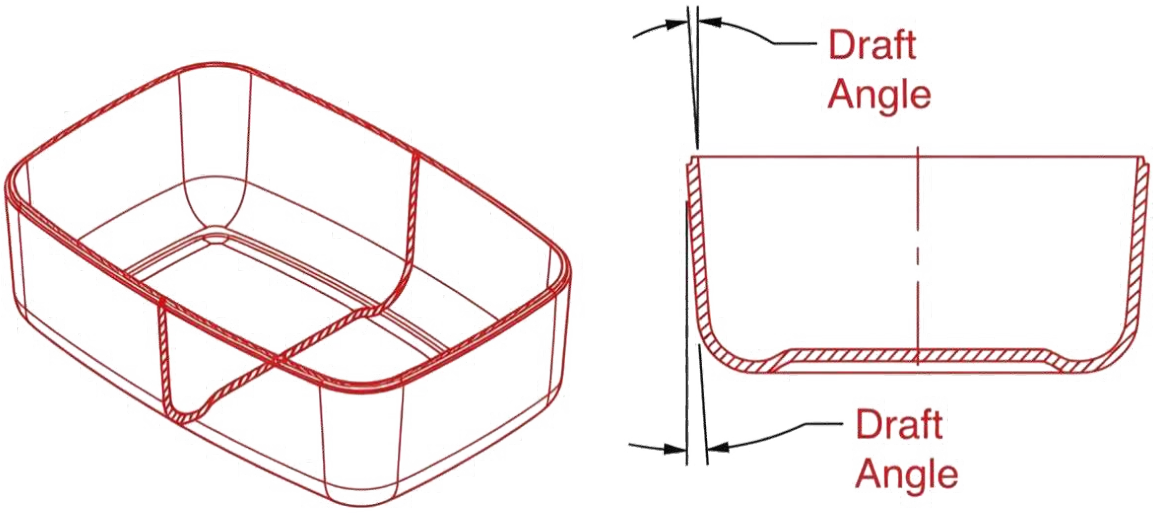

Figure 12. Draft angle allows a molded part to release from the mold

Draft is not added only for ejection — it is also a design constraint that influences textures, parting lines, feature geometry, and tooling complexity.

How to Approach the Calculation

Draft angle is measured relative to the direction of mold pull, not the nominal wall angle of the part. As a general rule, features with greater depth and smaller width require more draft because they maintain more contact area with the mold surface during ejection.

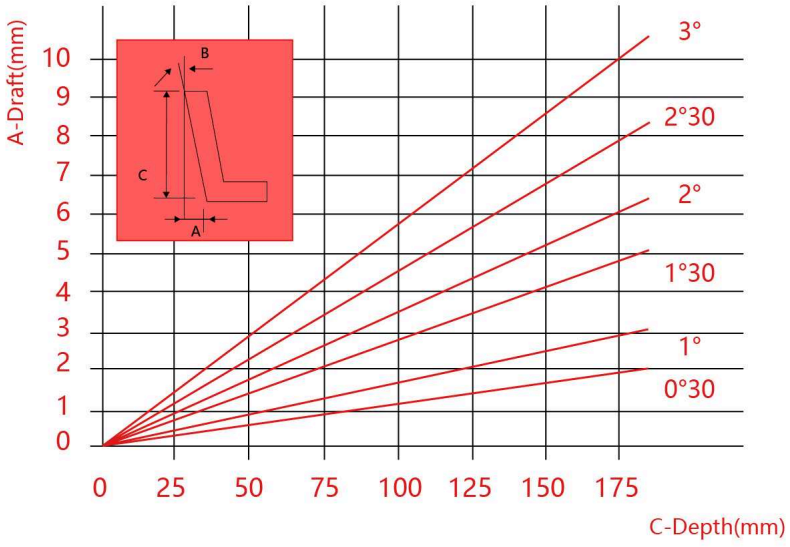

Figure 13. Deeper features require more draft for easier release

For example, a shallow rib may release with around 0.5° of draft, while a deep and narrow core feature may require significantly more to avoid binding.

Surface texture adds another factor. Textured surfaces create additional friction during ejection, so deeper textures typically require additional draft. A common guideline is to add approximately 1° of draft for every 0.025 mm (0.001 in) of texture depth, in addition to the draft required by the underlying geometry.

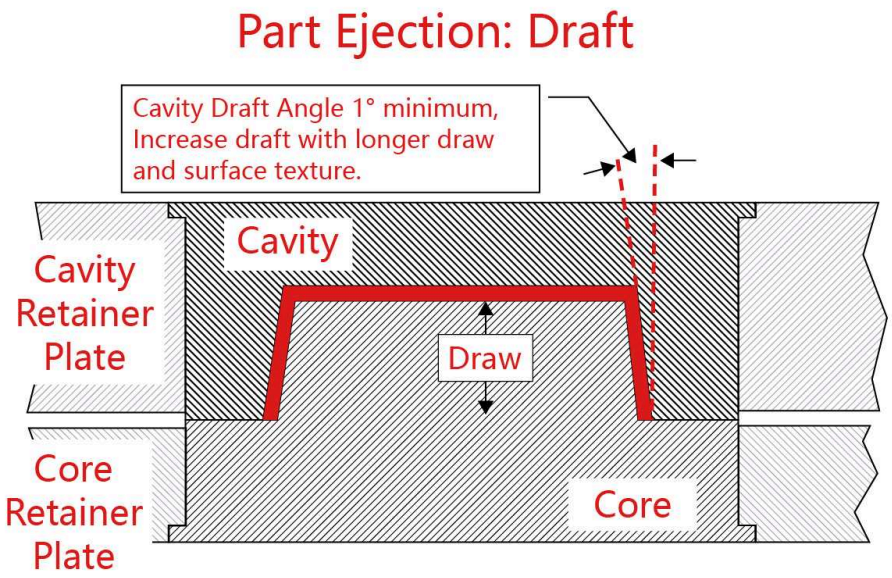

Figure 14. Deeper textures require additional draft

Recommended Draft Angles

Feature Type	Recommended Draft
General wall surfaces (smooth finish)	0.5° – 1.5
Textured surfaces	1.5° – 5°+ (depending on texture depth)
Ribs	0.25° – 0.5° per side
Bosses (outer surface)	0.5° – 1.5°
Deep cores / narrow pins	3°+
Snap-fit engagement faces	Often 0° by design intent — see Snap-Fits section

These values provide a practical starting point. Deeper features, tighter contact areas, and more aggressive textures may require additional draft depending on the specific geometry and tooling approach.

Practical Guidelines

- **Apply draft to any surface parallel to the mold pull direction.** Small features such as bosses, louvers, and ribs are easy to overlook even when the main walls are correctly drafted.
- **Add draft early in the design process.** Applying draft after the model is finalized can affect feature alignment, wall thickness consistency, and parting line decisions.
- **Increase draft for textured surfaces.** Texture depth directly affects the amount of draft required for reliable ejection.
- **Avoid forcing draft into features that require a precise mating function.** For surfaces that must remain flat or dimensionally controlled, consider alternative solutions such as part redesign, side-actions, or lifters.
- **Keep draft direction aligned with the parting line.** A draft angle that works for one mold-opening direction may create an undercut if the parting strategy changes.

Corners

Corners are the transitions where two walls meet at an angle — internal corners (the inside of the angle) and external corners (the outside). Sharp corners, especially internal ones, create stress concentrations and can also disrupt material flow during molding. At a sharp internal corner, the melt must change direction abruptly, while mechanical stress tends to concentrate at the same location instead of distributing smoothly across the wall.

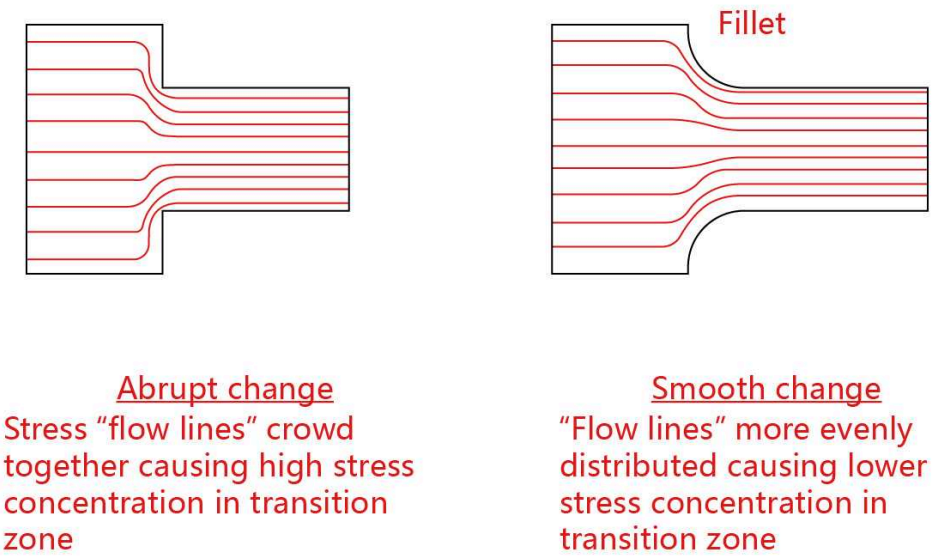

Figure 15. Corner geometry influences melt flow behavior

How to Approach the Calculation

Corner radii are generally sized as a ratio of the wall thickness and applied to both the inside and outside of the corner. As a starting point, the inside radius should be at least 0.5× the wall thickness, and the outside radius should equal the inside radius plus the wall thickness. This keeps the wall thickness consistent as the material wraps around the corner instead of creating a locally thick section.

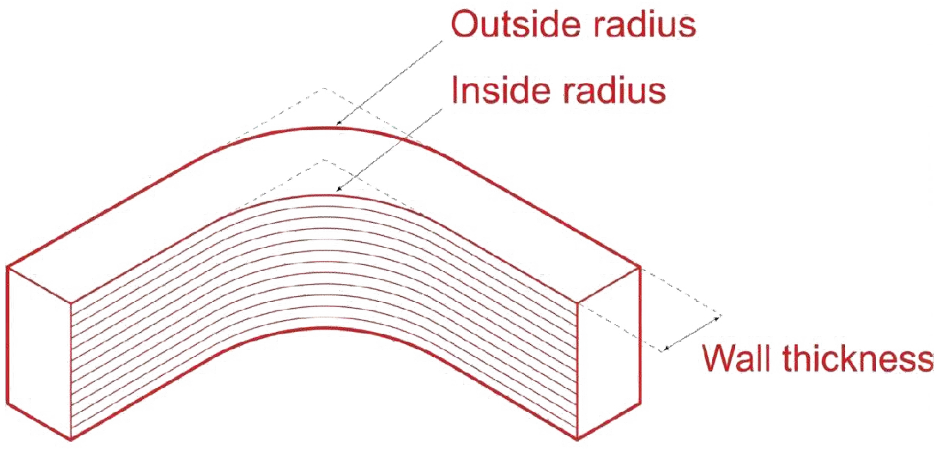

Figure 16. Corner radius relationship with wall thickness

The 0.5× minimum guideline is primarily driven by stress concentration. A sharp internal corner can increase local stress significantly compared with the surrounding wall, making it a common crack initiation point under load or impact. Increasing the radius reduces this effect substantially, with diminishing returns beyond roughly 0.75× the wall thickness.

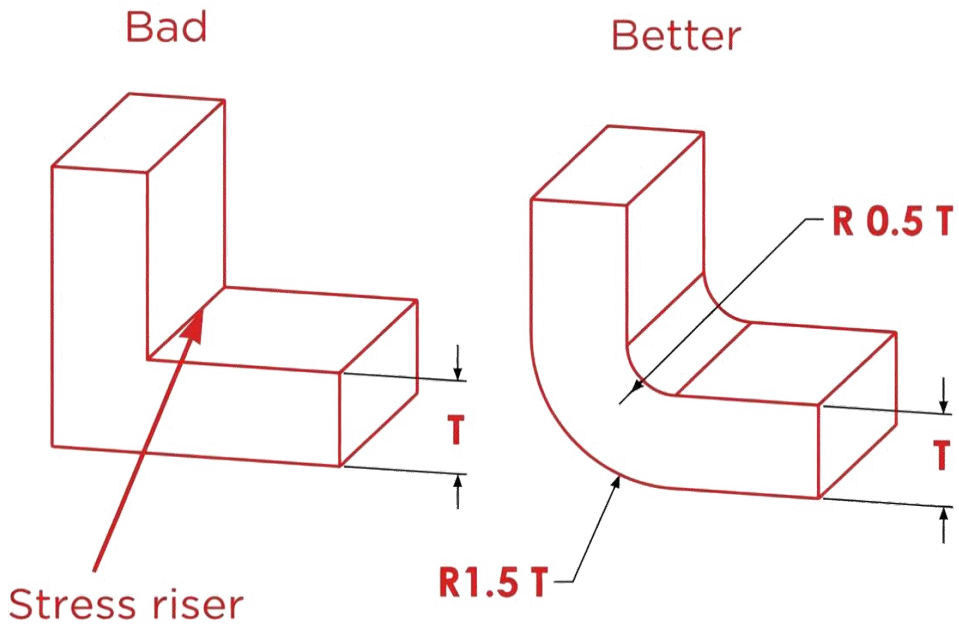

Figure 17. Increasing corner radius reduces stress concentration

Recommended Corner Radii

Corner Type	Recommended Radius
Inside corner (minimum)	0.5× wall thickness
Inside corner (preferred)	0.6× – 0.75× wall thickness
Outside corner	Inside radius + wall thickness
High-stress / impact areas	0.75×+ wall thickness where geometry allows

These ratios assume relatively uniform wall thickness on both sides of the corner. When the connected walls have different thicknesses, the radius is generally sized based on the thinner wall.

Practical Guidelines

- **Avoid sharp internal corners on structural or load-bearing features.** They are one of the most common locations for stress concentration and cracking.
- **Maintain constant wall thickness around corners.** Match the outside radius to the inside radius plus wall thickness instead of rounding only one side.
- **Check rib-to-wall and boss-to-wall junctions carefully.** These areas combine stress concentration with local thickness changes, increasing the risk of cracks, sink marks, and warpage.
- **Round external corners where possible.** Besides improving impact resistance, rounded edges are easier to mold consistently and usually produce better cosmetic results.
- **Avoid excessive radii that change functional geometry.** Beyond roughly 0.75× wall thickness, additional stress reduction becomes limited while the impact on part shape increases.

Ribs & Bosses

Ribs are thin, wall-like projections added to increase stiffness and strength without the weight and cycle-time penalty of a uniformly thicker wall. Bosses are cylindrical projections typically used for screws, inserts, locating features, or mounting points.

In many designs, ribs and bosses work together: ribs can support a boss against bending forces, while the boss provides the connection point that transfers loads into the part structure.

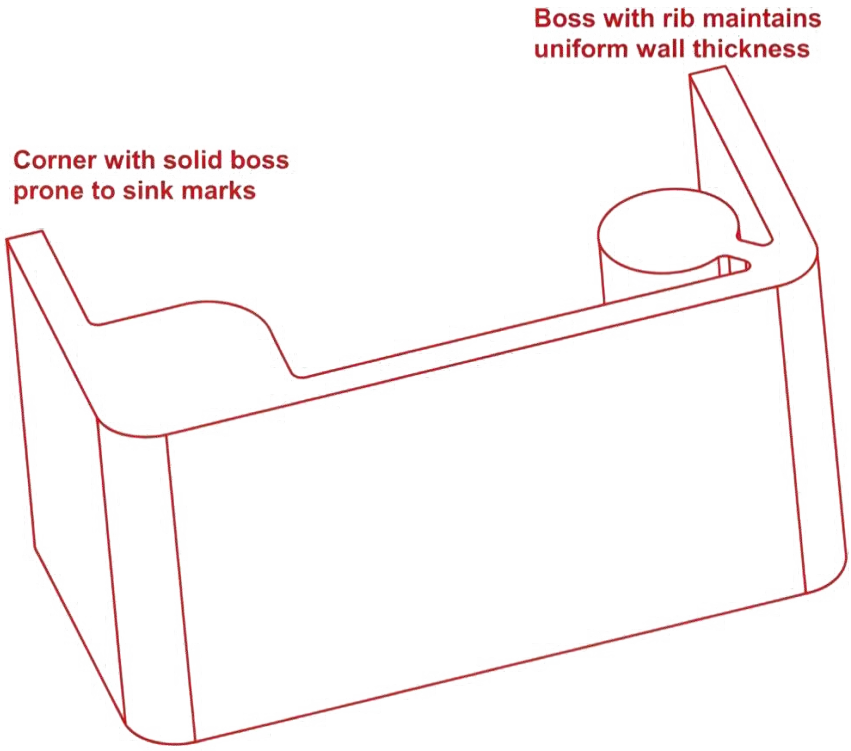

Figure 18. Ribs support bosses and reinforce molded structures

The challenge is that both features introduce local thickness changes where they connect to the nominal wall. These thicker regions cool more slowly and shrink more than surrounding material, creating potential sink marks, voids, and warpage.

How to Approach the Calculation

For both ribs and bosses, the key design ratio is feature thickness relative to the nominal wall thickness (T) they attach to.

For ribs, the base thickness is typically limited to 40–60% of T. A rib around 0.5T usually provides reinforcement without creating visible sink, while ribs approaching 0.75T or more are increasingly likely to leave sink marks on the opposite surface, especially in unfilled resins.

Rib height also affects performance, but not independently from thickness. A tall, thin rib is more likely to warp or fill poorly than a shorter rib with the same base thickness. As a practical guideline, height-to-thickness ratios above roughly 3:1 often require additional draft, fillet, or process consideration to maintain reliable molding.

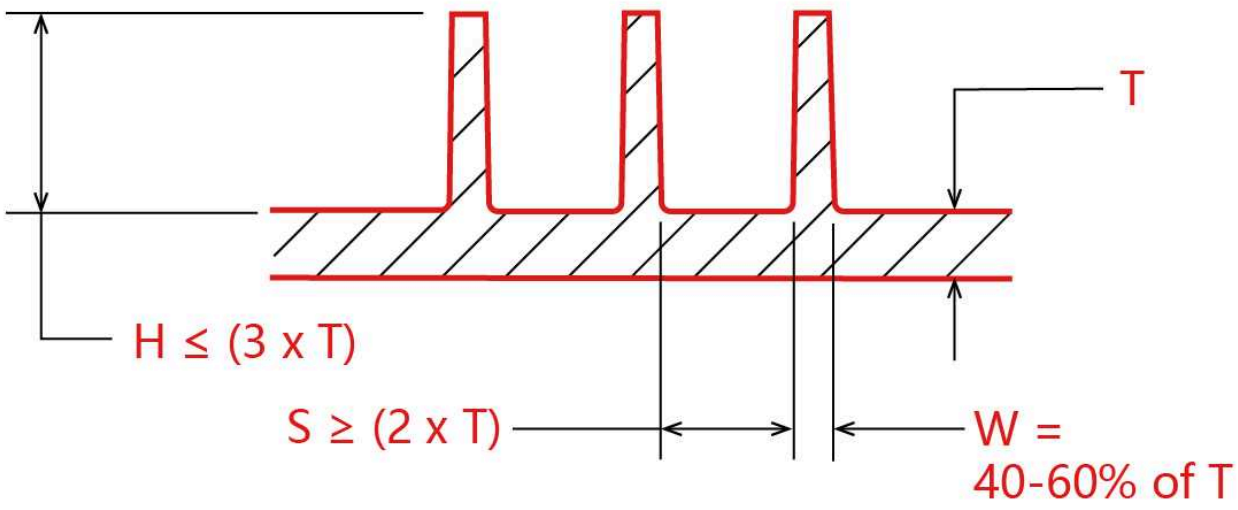

Figure 19. Recommended rib thickness relative to wall thickness

Bosses follow the same thickness principle but introduce another factor: the relationship between boss diameter and wall thickness. Bosses should generally be cored rather than molded as solid cylinders, keeping the remaining wall close to the surrounding part thickness. A solid boss with excessive diameter creates a large mass of material that is difficult to cool uniformly and is highly prone to sink marks.

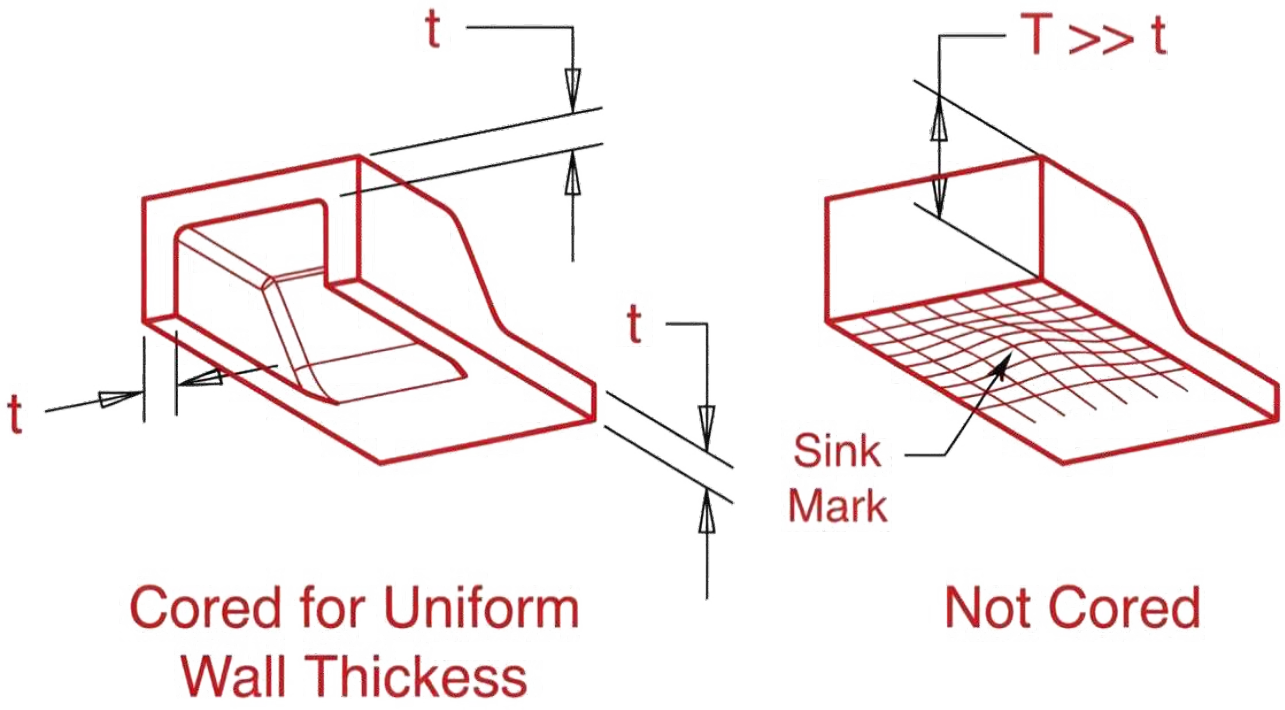

Figure 20. Cored bosses reduce thick sections and sink risk

Recommended Proportions

Feature	Recommended Proportion (relative to wall thickness T)
Rib base thickness	0.5T – 0.6T
Rib height	Up to 3× rib base thickness (taller ribs need additional draft/fillet)
Rib base fillet radius	0.25T – 0.4T
Rib draft (per side)	0.25° – 0.5°
Boss outer diameter	2.0 – 2.4× screw or insert diameter
Boss wall thickness (cored)	0.5T – 0.6T
Boss base fillet radius	0.25T – 0.4T

Practical Guidelines

- **Keep rib and boss thickness at or below 60% of the adjacent wall whenever possible.** Thicker sections should only be used when sink marks are acceptable or additional design measures are available.
- **Core out bosses instead of molding them solid.** A cored boss with controlled wall thickness cools more predictably and reduces sink risk.
- **Add fillets at the base of ribs and bosses.** Sharp 90° transitions create stress concentration and can restrict smooth material flow.
- **Need more stiffness? Add more ribs instead of making one rib thicker.** Multiple thinner ribs usually provide better reinforcement without crossing the sink-risk threshold.
- **Keep bosses away from visible outer surfaces where possible.** Bosses placed too close to cosmetic walls can leave visible sink marks or read-through.
- **Check thin sections around cored bosses near edges and corners.** Removing material from a boss can improve cooling, but excessive coring may weaken the surrounding wall or affect filling.

Gussets

A gusset is a triangular or wedge-shaped support rib added at the base of a boss, wall, or mounting feature to improve resistance against bending loads. Unlike a standard rib, which mainly stiffens a wall against flexing, a gusset reinforces a feature that projects away from the main wall — such as a boss, bracket, or mounting tab — by transferring side loads back into the base structure.

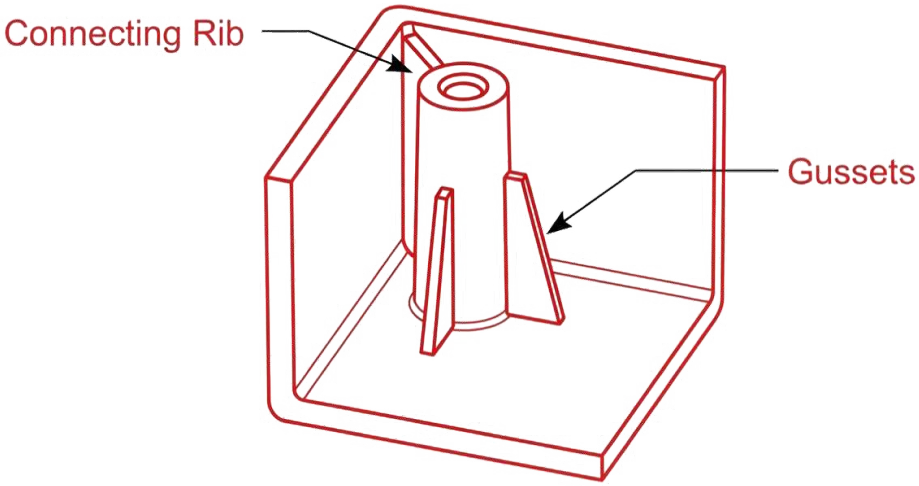

Figure 21. Ribs and gussets serve different reinforcement functions

How to Approach the Calculation

Gussets follow the same thickness principle as ribs because they are essentially a specialized rib geometry. Their base thickness is typically sized relative to the adjacent wall thickness (T), usually within the same 0.5–0.6T range, to provide reinforcement without creating excessive material accumulation.

The main design consideration for gussets is not only thickness, but also placement and distribution. A single gusset provides strong support in one direction but limited resistance from other directions. For features exposed to multi-directional loads, multiple gussets arranged around the feature often provide more balanced support than increasing the size of one gusset.

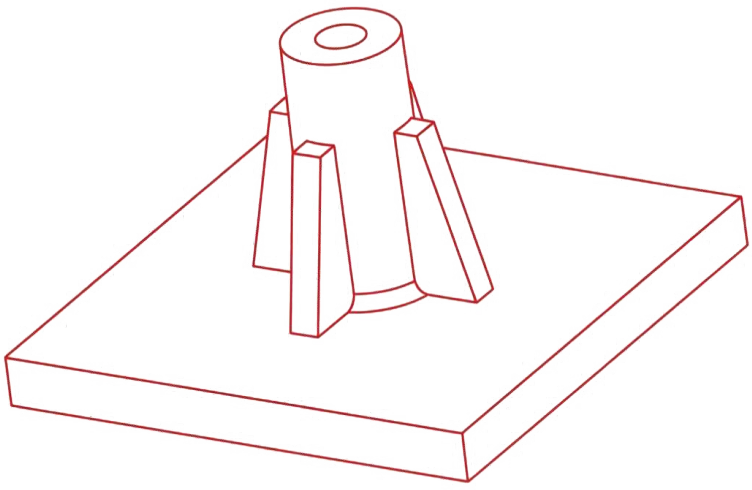

Figure 22. Multiple gussets improve directional support

Spacing also matters. Closely packed gussets can create a concentrated thick section at the base of a boss or wall, reducing cooling consistency and increasing sink-mark risk. A well-distributed gusset pattern usually provides better reinforcement without introducing unnecessary mass.

Recommended Proportions

Parameter	Recommended Value (relative to wall thickness T)
Gusset thickness	0.5T – 0.6T
Gusset height	Generally matched to the height of the supported feature
Base fillet radius	0.25T – 0.4T
Base fillet radius	0.25° – 0.5° (same as standard ribs)
Spacing between adjacent gussets (at a boss)	Maintain enough spacing to avoid local thick sections

Practical Guidelines

- **Size gusset thickness based on the supporting wall thickness,** not the boss or feature thickness.
- **Use multiple smaller gussets instead of one oversized gusset.** Distributed reinforcement usually provides better load support without creating thick sections.
- **Align gussets with the expected load direction.** A gusset only reinforces effectively when it supports the actual force path.
- **Add a base fillet to every gusset.** Sharp transitions create stress concentration where loads transfer into the wall.
- **Check gusset intersections carefully.** Where gussets meet ribs, bosses, or corners, avoid creating isolated thick areas that are difficult to cool.

Transitions

Transitions are the areas where a part's wall thickness changes from one value to another — for example, where a thin outer shell connects to a thicker mounting area, or where a rib blends into the surrounding wall. A transition is not a feature by itself, but the way it connects different features has a major influence on cooling behavior, warpage, and sink marks.

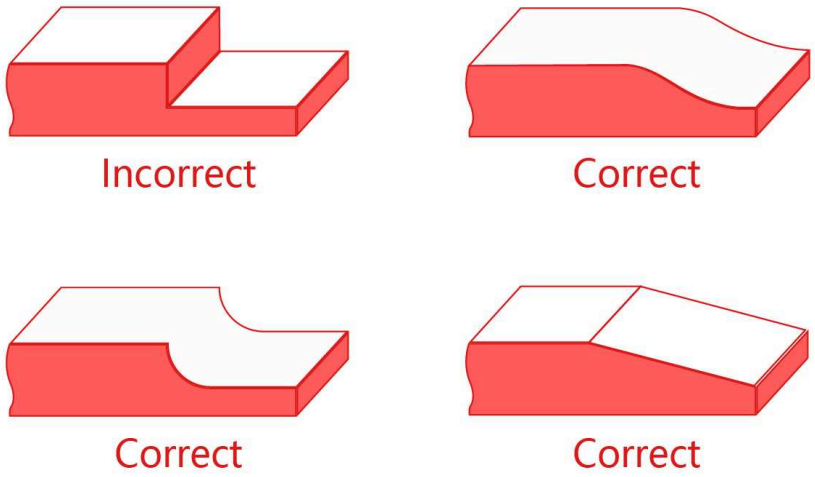

Figure 23. Rib transitions should avoid local thickness buildup

How to Approach the Calculation

The main challenge with thickness changes is that thicker sections cool and shrink differently from thinner sections. An abrupt step concentrates this difference at one location, creating uneven shrinkage that can appear as warpage, sink marks, or visible transition lines.

The preferred approach is to distribute the thickness change gradually rather than forcing the material to change volume at a single boundary. A common starting guideline is to taper the transition over a length of at least 3× the difference between the two wall thicknesses. For example, a change from 2 mm to 3 mm would typically use a transition length of around 3 mm.

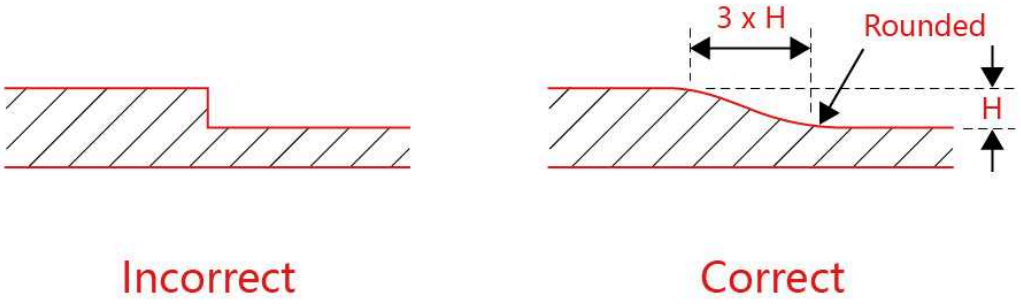

Figure 24. Gradual transitions reduce abrupt thickness changes

The larger the thickness difference, the more important the transition becomes. When the change becomes too large, extending the taper alone may no longer be effective, and redesigning the geometry or coring out excess material is usually a better solution.

Recommended Parameters

Corner Type	Recommended Radius
Transition length	≥ 3× the difference in wall thickness
Inside corner (preferred)	Gradual taper or radius, not a sharp step
Fillet at transition corners	0.25T – 0.4T (same logic as standard corners)
Maximum practical thickness ratio across a transition	Roughly 2:1; larger differences often require coring orredesign

Practical Guidelines

- **Avoid abrupt thickness changes.** Blend one wall thickness into another through a taper or radius.
- **Treat large thickness differences as a geometry problem, not just a transition problem.** When adjacent sections exceed roughly a 2:1 thickness ratio, redesigning the feature is often more effective than extending the taper.
- **Apply transition principles to local features as well.** Rib, boss, and gusset connections need the same attention as larger wall thickness changes.
- **Keep transitions away from visible surfaces when possible.** Even a properly designed transition may leave a subtle read-through mark under certain cosmetic conditions.
- **Review transition areas during mold flow analysis.** Thickness changes are common locations for filling hesitation, uneven cooling, and warpage.

Undercuts

An undercut is any part feature that prevents the mold from opening and ejecting the part along a single straight pull direction — such as a snap hook, internal groove, side hole, or any geometry that locks behind the mold surface.

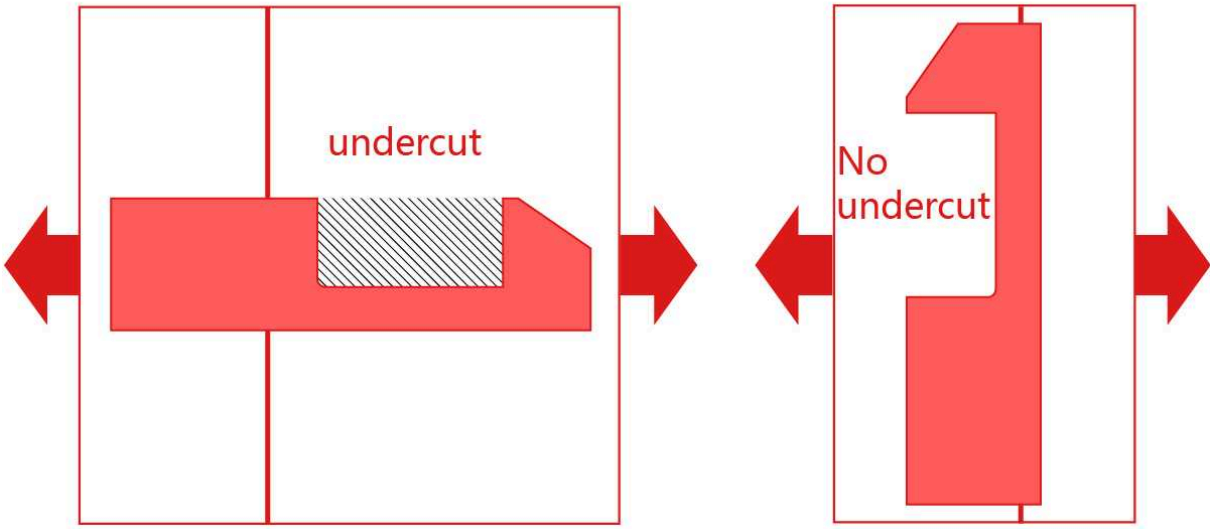

Figure 25. An undercut prevents release along the mold pull direction

Undercuts are not inherently a design flaw; many functional features, including snap-fits and latches, rely on them. The real design question is not whether an undercut exists, but how it will be released from the mold.

How to Approach the Calculation

The first consideration is whether the undercut can be removed through part redesign. Reorienting the part, moving the feature across the parting line, or adjusting the geometry can often eliminate the need for additional tooling, which is usually the simplest and most cost-effective solution.

If the undercut is unavoidable, the next question is whether the feature can tolerate a small amount of elastic deformation during ejection. Shallow undercuts in flexible materials may sometimes be released by allowing the part to deflect slightly as it moves off the core. This approach is generally limited to small undercuts — often around 2–5% of the feature diameter or width for rigid materials, and somewhat more for flexible resins with higher elongation.

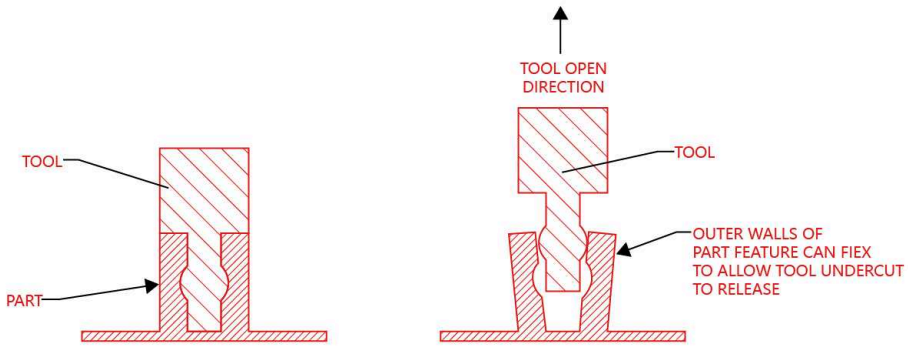

Figure 26. Small undercuts can sometimes release through elastic part deflection

For deeper undercuts, the mold itself must provide a release mechanism. External undercuts are commonly handled with side-action slides, while internal undercuts typically require lifters or similar mechanisms. These solutions increase mold complexity and should be considered early in tooling design rather than added after the mold structure is finalized.

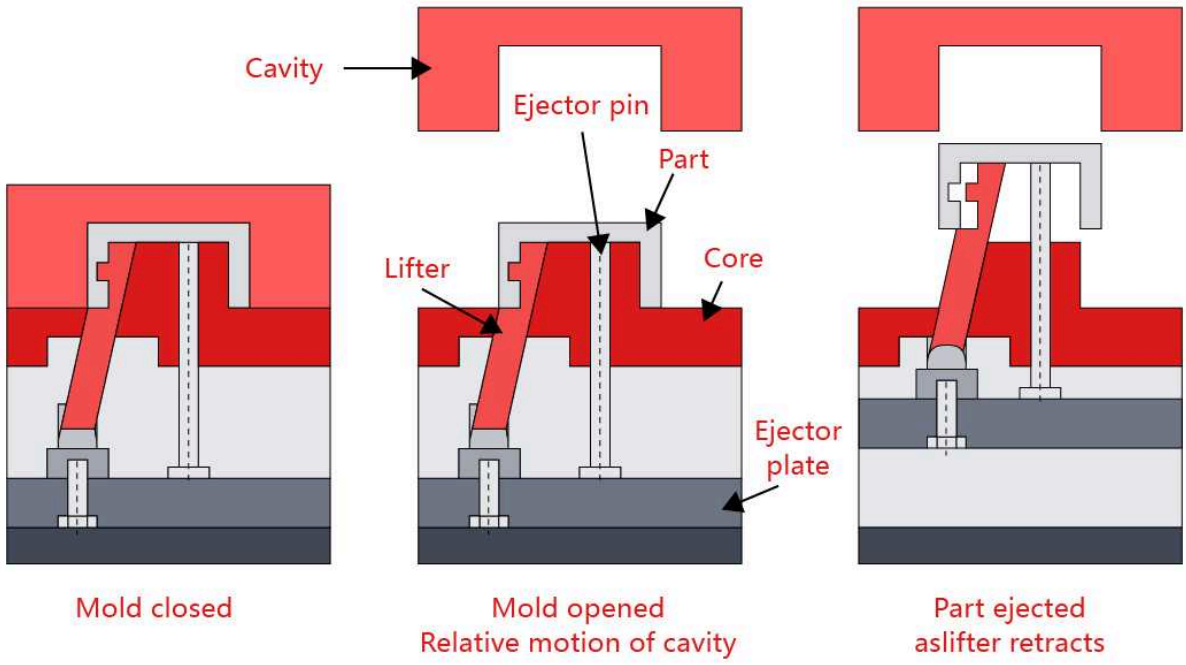

Figure 27. Injection mold lifter mechanism cross-section

Recommended Parameters

Undercut Type	Guideline
Bump-off (rigid resin, e.g., ABS, PC)	Undercut depth ≤ ~5% of feature diameter
Bump-off (flexible resin, e.g., PP, PE)	Undercut depth ≤ ~8–10% of feature diameter
External undercut beyond bump-off range	Requires side-action slide
Internal undercut beyond bump-off range	Requires lifter
Undercut relief (where geometry allows)	Redesign feature to align with pull direction when possible

Practical Guidelines

- **Try to design the undercut out first** — a small change in part orientation or a split line adjustment often removes the need for extra tooling entirely.
- **Simplify slides and lifters whenever possible.** Reducing the number of mold actions directly reduces tooling complexity and maintenance requirements.
- **Reserve force-release ejection for shallow, genuinely flexible features;** forcing a rigid or oversized undercut past the mold risks cracking the part or damaging the tool.
- **Round or angle the lead-in edge of any force-released undercut,** since a sharp edge increases the force needed to release it and the risk of scarring the part.
- Where multiple undercuts exist on one part, **check whether they can share a single slide or lifter** rather than each requiring a separate mechanism.

Threads

Threads are helical ridges molded into a part to create a screw-type connection, either internal (such as a bottle cap thread) or external (such as a threaded stud).

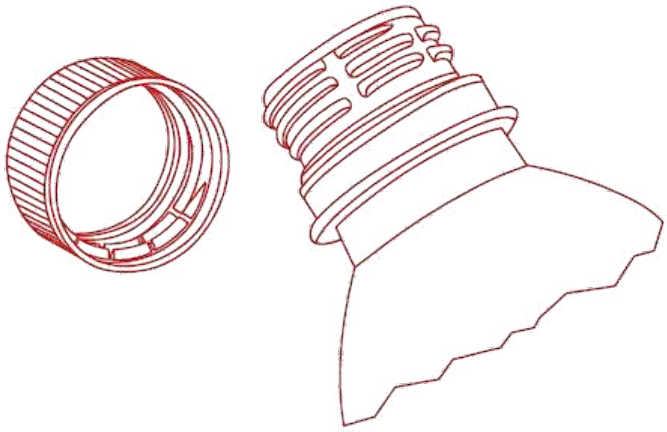

Figure 28. Internal and external threads in injection molded parts

A molded plastic thread is not simply a plastic version of a standard machined thread. The sharp 60° V-profile commonly used for metal fasteners is poorly suited to injection molding: sharp thread roots concentrate stress, while sharp peaks are harder to fill and more vulnerable during ejection. For this reason, molded threads usually use rounded or modified profiles that sacrifice little functional performance while improving moldability and durability.

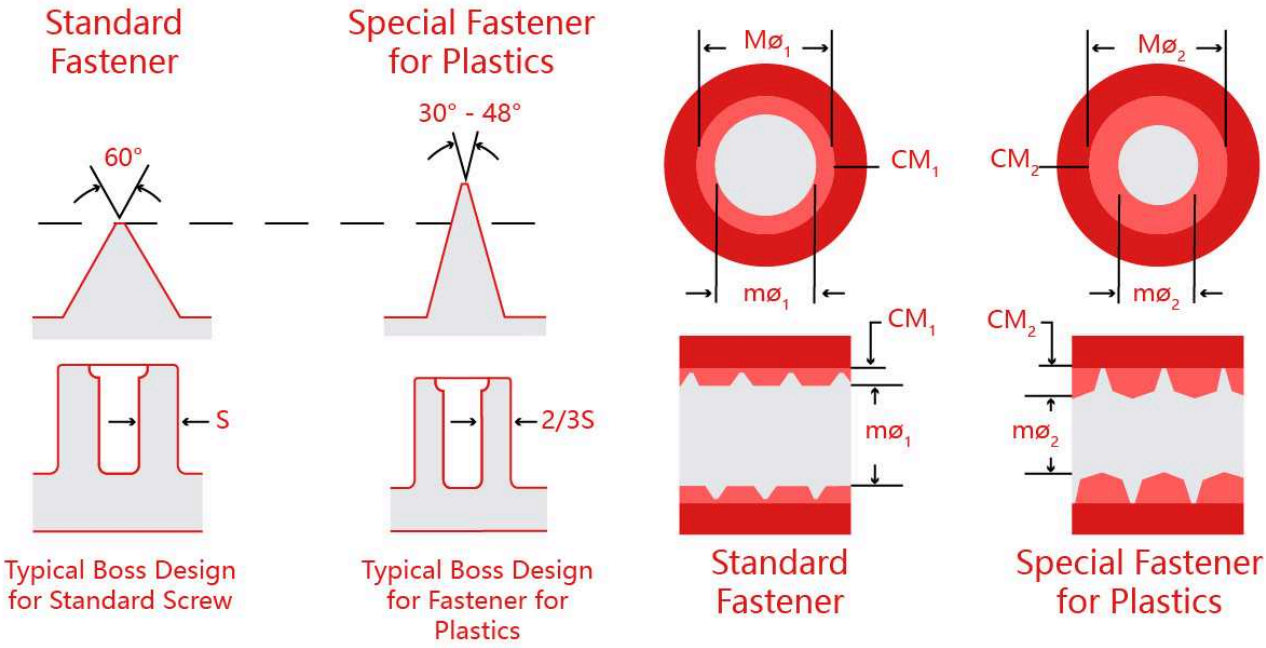

Figure 29. Plastic threads use modified profiles for better moldability

Because a thread is a continuous spiral undercut, it cannot be released from a mold through a simple straight pull. It requires either a mechanism such as an unscrewing core or collapsible core, or a thread geometry shallow enough to release through controlled deformation.

Thread Geometry Considerations

The first design decision is how the thread will be produced. Molded-in threads typically require an unscrewing core or collapsible core, making them practical for higher-volume production but adding complexity to the mold. For lower volumes, or when maximum thread precision is required, secondary machining or molded inserts may be a better approach.

Thread geometry affects both performance and manufacturability. Fine, shallow threads are easier to fill and release, while coarse, deep threads place greater demands on the mold mechanism and surrounding material strength. Material selection also matters: dimensionally stable resins such as nylon, acetal, and PC generally maintain thread accuracy better than higher-shrinkage materials.

Avoid sharp thread roots and crests. A rounded profile with a root radius around 0.1–0.15× the thread pitch is a common starting point, reducing stress concentration while maintaining sufficient thread engagement.

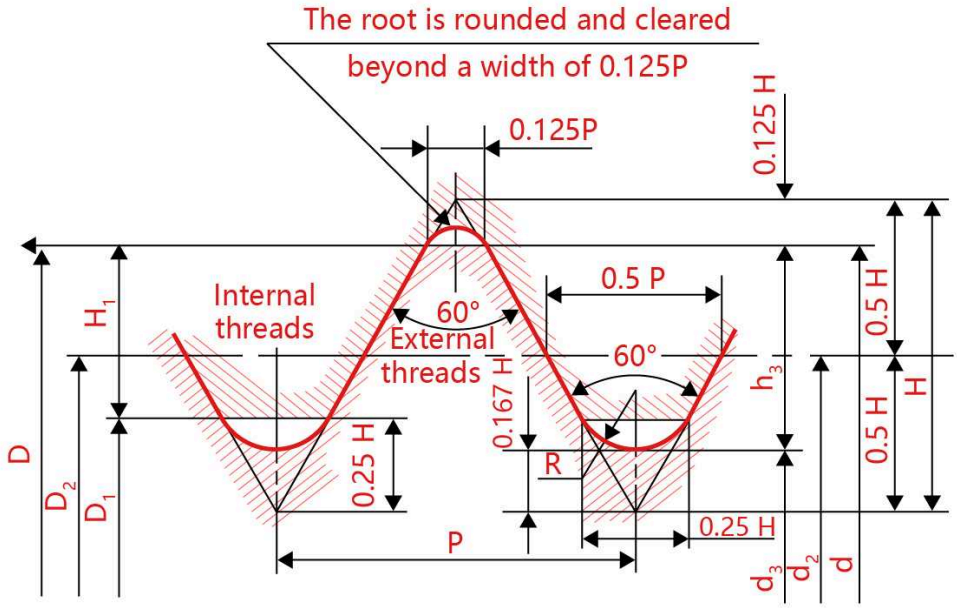

Figure 31. Thread root radius reduces stress concentration

For external threads, add a lead-in chamfer at the thread entrance. This improves molding at the thread start and helps prevent cross-threading during assembly.

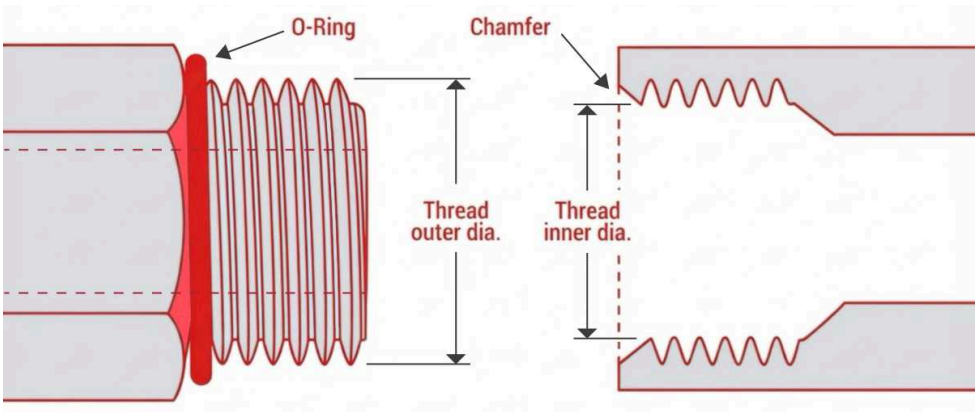

Figure 30. A lead-in chamfer helps align mating threads

Recommended Parameters

Parameter	Guideline
Minimum recommended thread pitch	≥ 0.75 mm
Thread root/crest radius	~0.1–0.15× thread pitch
Thread base wall	Keep the wall beneath the thread root close to nominal T
Thread release method	Unscrewing core, collapsible core, or controlled deformation depending on geometry
Lead-in chamfer (external threads)	0.4–0.8 mm at approximately 45°
Production method by volume	Molded-in threads for high volume; secondary operations or inserts for low volume/special requirements

Practical Guidelines

- **Use plastic-specific thread profiles instead of standard metal threads.** Rounded profiles improve mold release and reduce stress concentration.
- **Consider a screw boss before choosing molded threads.** Self-tapping screws are often simpler and more tolerant unless repeated assembly is required.
- **Avoid extremely fine pitches and small thread diameters.** They increase filling difficulty and make the thread more sensitive to wear and damage.
- **Add a lead-in chamfer at the thread entrance.** A small entry feature improves assembly reliability and prevents cross-threading.
- **Design supporting geometry around the insert process when using metal inserts.** Heat staking, ultrasonic insertion, and insert molding require different boss structures.

Holes

Holes in injection molded parts are typically formed by core pins extending into the mold cavity rather than drilled after molding. The plastic flows around the pin and solidifies to form the opening.

This makes molded holes fundamentally different from drilled holes. A core pin can interrupt the flowpath, split the melt into separate fronts, and create a weld line where those fronts meet after passing around the obstruction.

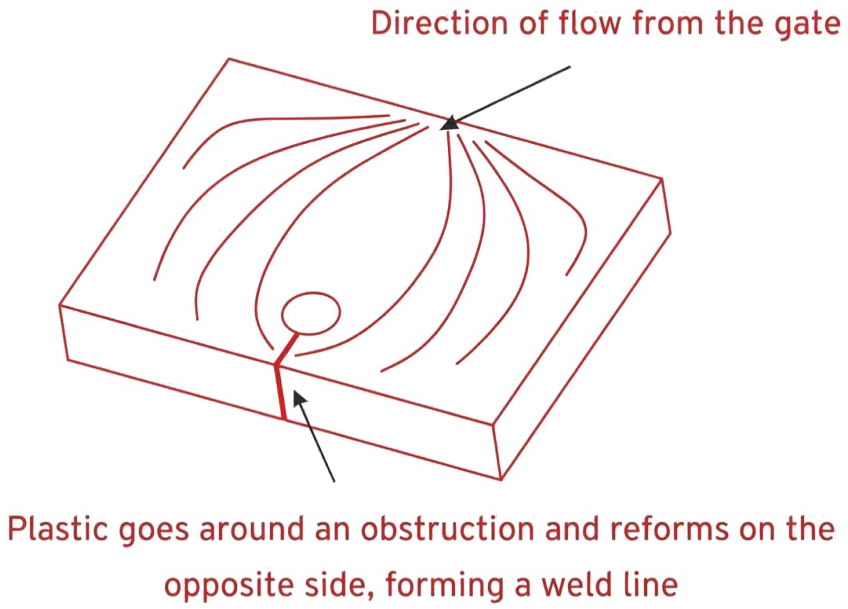

Figure 32. Core pins can split melt flow and create weld lines

How to Approach the Calculation

The primary design constraint for a molded hole is the ratio between hole diameter and depth. A core pin is essentially a slender steel member supported by the mold, and deeper, thinner pins are more susceptible to deflection under injection pressure. The result is often a hole that is tapered, misaligned, or dimensionally inconsistent.

Hole location is equally important. A hole positioned too close to an edge leaves insufficient material around the opening, reducing structural strength and increasing the risk of distortion during cooling. A practical starting point is keeping the edge distance at least equal to the hole diameter.

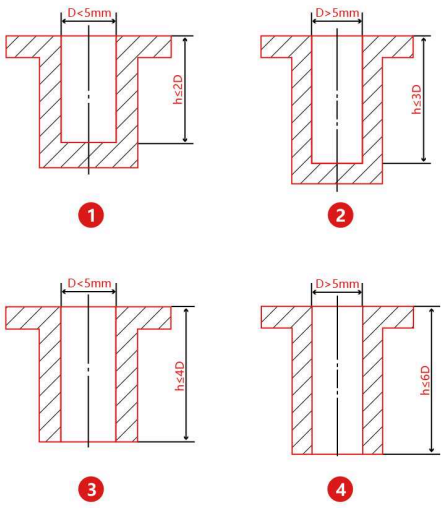

Figure 33. Through-holes allow stronger core pin support than blind holes

The relationship between holes and surrounding features also affects flow. Closely spaced holes, ribs, and bosses force the melt to split and merge repeatedly, creating weld lines where flow fronts meet. When a weld line falls in a critical structural or cosmetic area, the layout should be reviewed before tooling begins.

Recommended Parameters

Parameter	Guideline
Blind hole depth-to-diameter ratio	≤ 2–3:1
Through-hole depth-to-diameter ratio	Can generally exceed blind-hole limits depending on tool design
Minimum edge distance	≥ 1× hole diameter
Minimum spacing between adjacent holes	≥ 1× hole diameter (increase if weld-line location is critical)
Core pin draft (deep holes)	Slight draft may improve release, following general draft principles

Practical Guidelines

- **Prefer through-holes over blind holes when possible.** A core pin supported from both ends is more stable than a cantilevered pin.
- **Keep blind holes shallow relative to diameter.** For deeper features, consider stepped geometry or alternative tooling approaches.
- **Maintain sufficient material around holes.** Edge distance and feature spacing should support both structural requirements and molding stability.
- **Check holes near the main flow path.** Weld lines created around core pins may affect strength or appear on cosmetic surfaces.
- **Size molded holes for their final function.** For tapped holes or metal inserts, design the pre-hole according to the insert or tap requirements rather than the final thread diameter.

Living Hinge

A living hinge is a thin, flexible section of plastic that connects two rigid sections of the same molded part, allowing them to fold relative to each other through repeated cycles without a separate mechanical joint.

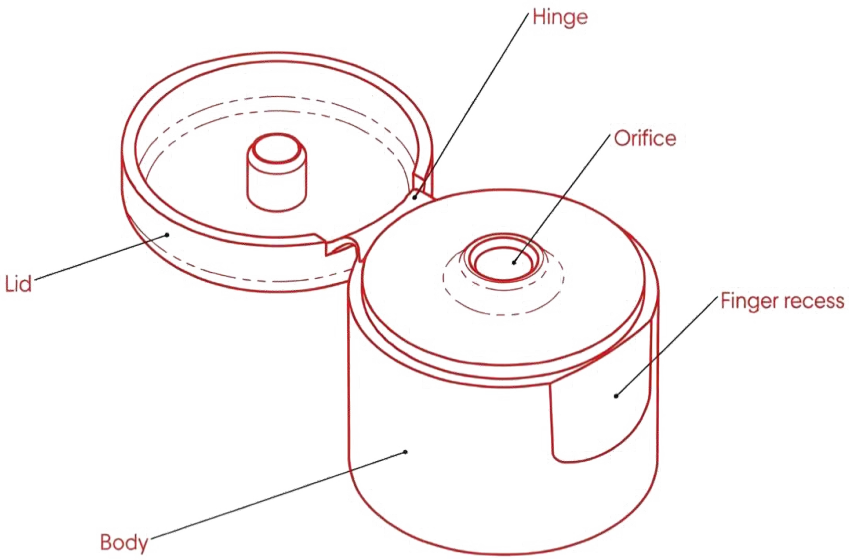

Figure 34. A living hinge allows repeated folding through a thin flexible section

The term is sometimes used loosely, so it is worth separating a true living hinge from other hinge concepts. A living hinge is not a pin hinge, where two separate components rotate around a mechanical pin, and it is not a snap hinge, where surrounding geometry creates stable open and closed positions. A living hinge itself is simply a flexible polymer section; any snap-through behavior comes from the surrounding geometry, not from the hinge alone.

Material selection is much more limited for this feature than for most injection molded geometries. A reliable living hinge requires excellent flex-fatigue resistance, which is why polypropylene (PP) is the standard choice. Other common resins such as ABS, polycarbonate, and unmodified nylon are generally poor candidates for repeated flexing because they tend to fatigue and crack under cyclicbending.

How to Approach the Calculation

Hinge thickness is the primary design variable. Unlike most features in this guide, a living hinge cannot simply be made stronger by adding material — increasing thickness changes the bending behavior and raises the strain required during folding.

The key calculation is the strain experienced by the outer surface of the hinge during bending:

$$\varepsilon \approx t / (2r + t)$$

where t is the hinge thickness and r is the bend radius at the fold.

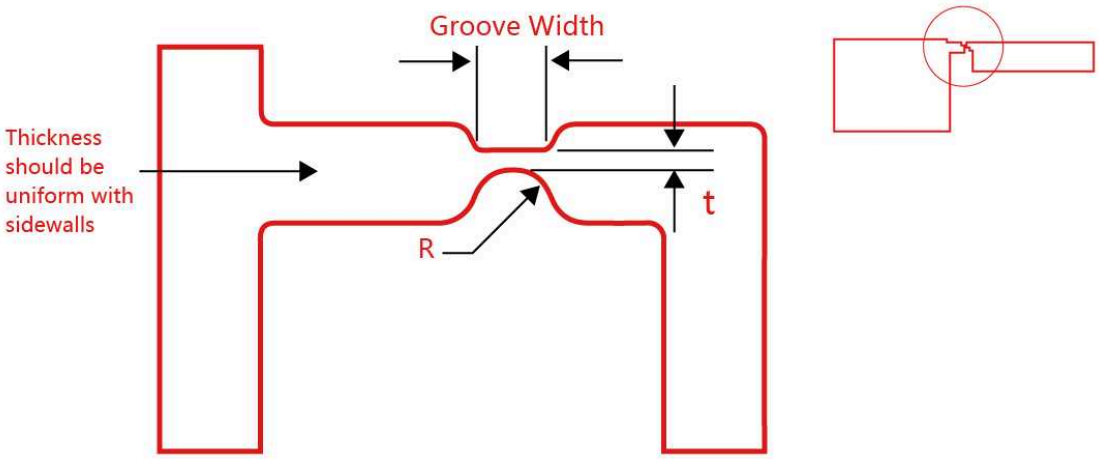

Figure 35. Living hinge strain increases with hinge thickness and bending radius

As the hinge bends, the outer surface stretches while the inner surface compresses. The goal is to keep the bending strain within the material's repeated-flex capability. For polypropylene, although elongation at break may range widely by grade, practical repeated-flex designs typically operate at a much lower strain level.

For example, a 0.3 mm thick hinge with a 0.3 mm bend radius produces approximately 33% strain. This can work well for PP living hinges, but reducing the radius further or increasing the thickness would quickly push the hinge toward premature fatigue.

Unlike normal wall thickness rules, living hinge thickness is determined by flex behavior rather than the surrounding wall thickness. A common starting range is 0.2–0.4 mm.

Flow direction also plays an important role. Because polymer chains tend to orient during filling, a hinge molded with flow across the hinge line generally performs better than one where flow runs along the fold direction. The molecular orientation helps the hinge withstand repeated bending.

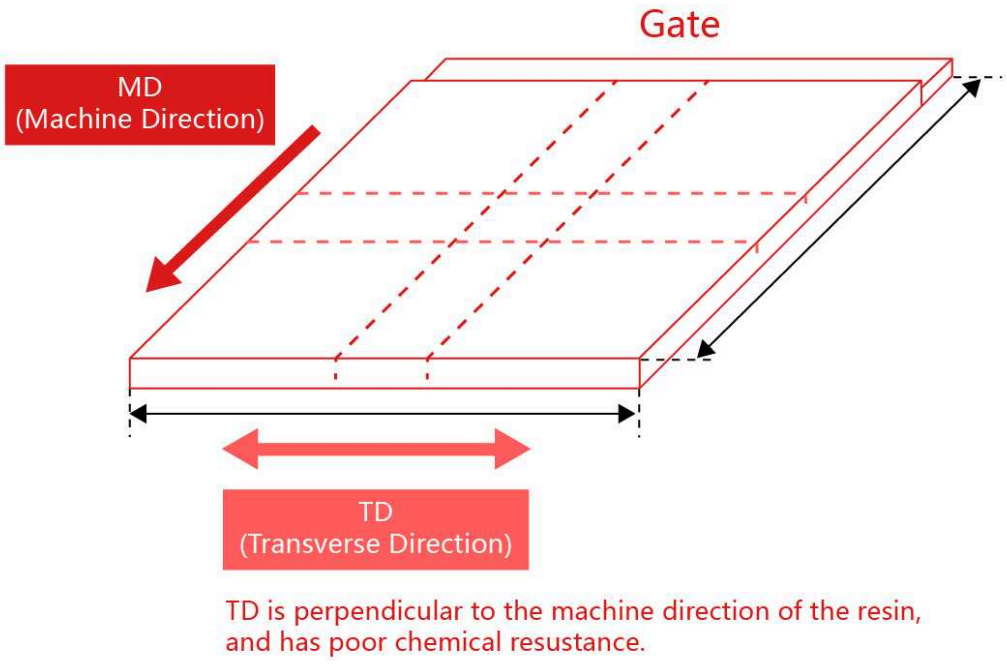

Figure 36. Flow direction influences polymer orientation and living hinge durability

Recommended Parameters

Parameter	Guideline
Recommended material	Polypropylene (PP) — standard choice for living hinges
Hinge thickness	0.2–0.4 mm
Hinge land length	~0.5–1.0 mm
Transition into hinge	Smooth radius, avoid sharp thickness steps
Flow direction	Across the hinge line, not along the fold direction
Post-mold flexing	Flex the hinge several times after ejection while the part is still warm

Practical Guidelines

- **Use polypropylene by default.** Most other common injection molding resins are not suitable for repeated living-hinge cycles.
- **Keep the hinge thin.** Adding thickness usually increases bending strain instead of improving hinge life.
- **Round the transition into the hinge.** A smooth blend distributes stress more evenly than a sharp step.
- **Align flow across the hinge line whenever possible.** Mold filling direction directly affects fatigue performance.
- **Condition the hinge after molding.** Initial flexing while the part is warm helps establish the hinge's final orientation and performance.
- **Design the surrounding geometry carefully.** The hinge itself provides flexibility; the adjacent structure determines opening angle, stop position, and overall function.

Snap-Fits

A snap-fit is a molded feature that deflects during assembly and then returns partially or fully to lock two components together.

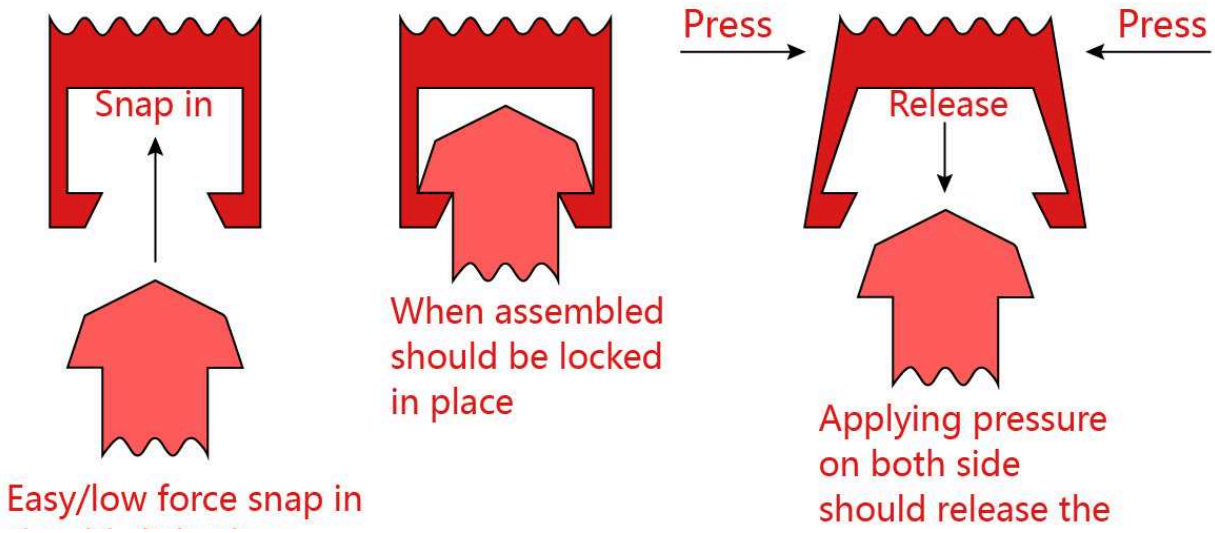

Figure 37. Snap-fits lock components through controlled elastic deformation

Snap-fits are not a single geometry but a family of mechanisms. Different types rely on different deformation modes and therefore have different design calculations and failure points. The three most common forms in injection molded parts are cantilever snap-fits, torsional snap-fits, and annular (ring) snap-fits.

Cantilever Snap-Fit

The cantilever snap-fit is the most widely used type: a beam-like arm fixed at one end with a hook near the free end. During assembly, the hook rides over the mating feature and forces the arm to deflect. Once the hook passes the engagement point, the arm returns and locks the two parts together.

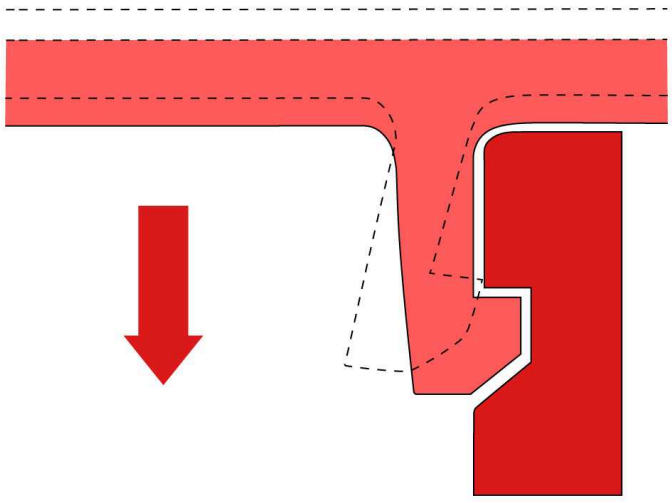

Figure 38. Cantilever snap-fits lock through beam deflection and elastic recovery

How to Approach the Calculation

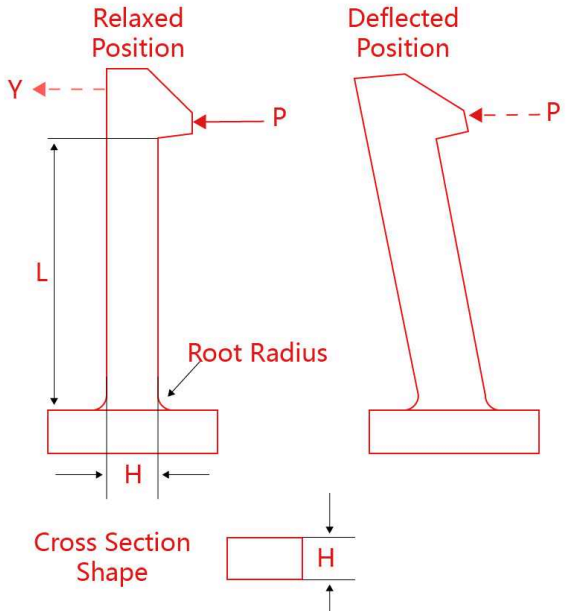

Figure 39. Cantilever snap-fit deflection parameters

For a uniform cantilever beam (snap-fit arm), the relationship between strain and tip deflection can be approximated as:

$$\varepsilon = (3 \times H \times y) / (2 \times L^2)$$

where H is the arm thickness in the deflection direction (the cross-section dimension shown in the diagram), y is the tip deflection, and L is the arm length, measured from the root to the tip. Rearranging:

$$y = (2 \times \varepsilon \times L^2) / (3 \times H)$$

This equation highlights the main design levers of a cantilever snap-fit. A longer arm increase sallowable deflection, while excessive thickness reduces flexibility by increasing strain.

When a snap-fit cracks during assembly, the first solutions are usually to **increase arm length, reduce thickness, or reduce required engagement**, rather than simply adding material.

Hook engagement depth (ξ) directly determines the required deflection of the beam. During assembly, the arm must deflect by an amount related to ξ as the hook passes the mating feature, reaching its maximum deflection at the point of highest interference.

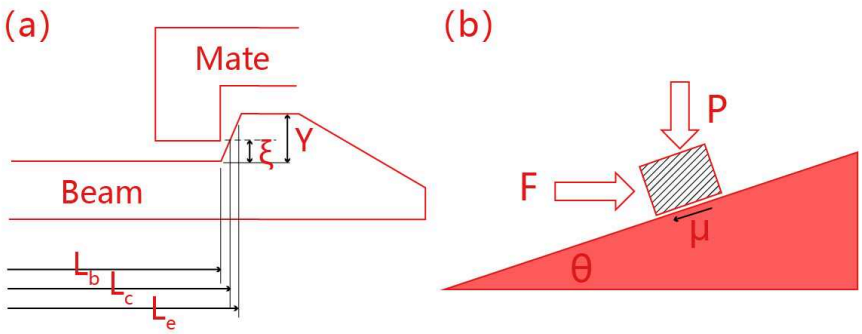

Figure 40. Hook engagement depth and cantilever deflection parameters

A deeper hook (larger ξ) improves retention because it creates greater mechanical engagement before release. However, it also increases the deflection — and therefore the strain — that the beam must accommodate during assembly.

The lead-in angle (θ) at the ramp surface, together with the friction coefficient between mating surfaces (μ), influences the assembly force (F) required to move the hook past the opposing feature.

A shallower angle generally reduces assembly force but requires a longer ramp, while a steeper angle shortens the ramp but increases the required force.

Hook geometry (ξ, θ) and arm flexibility must therefore be designed together. Increasing engagement depth or steepening the lead-in angle increases the demand placed on the beam and must remain within the allowable strain limit of the material.

Recommended Parameters

Parameter	Guideline
Arm thickness	Typically 0.5–1× nominal wall thickness
Hook engagement depth	0.4–1.0 mm for common small-to-medium snap-fits
Assembly lead-in angle	30°–45° to reduce insertion force
Assembly lead-in angle	Near 90° for permanent retention; 30°–45° when easier release is needed
Root fillet radius	0.5T–1.0T to reduce stress concentration

Practical Guidelines

- If the arm cracks during assembly, **increase length or reduce thickness** before changing material.
- **Add a generous root fillet.** The arm base carries the highest bending stress and is the most common failure location.
- **Match hook angles to the intended function.** Steep return angles improve retention; shallow angles improve release.
- **Design engagement with tolerance stack-up in mind.** Required deflection depends on actual mating dimensions, not nominal CAD values.

Torsional Snap-Fit

A torsional snap-fit uses a twisting element rather than a bending arm. Instead of deflecting like a cantilever beam, the flexible section rotates around its axis, typically through a short torsion bar that connects a lever arm, button, or latch mechanism.

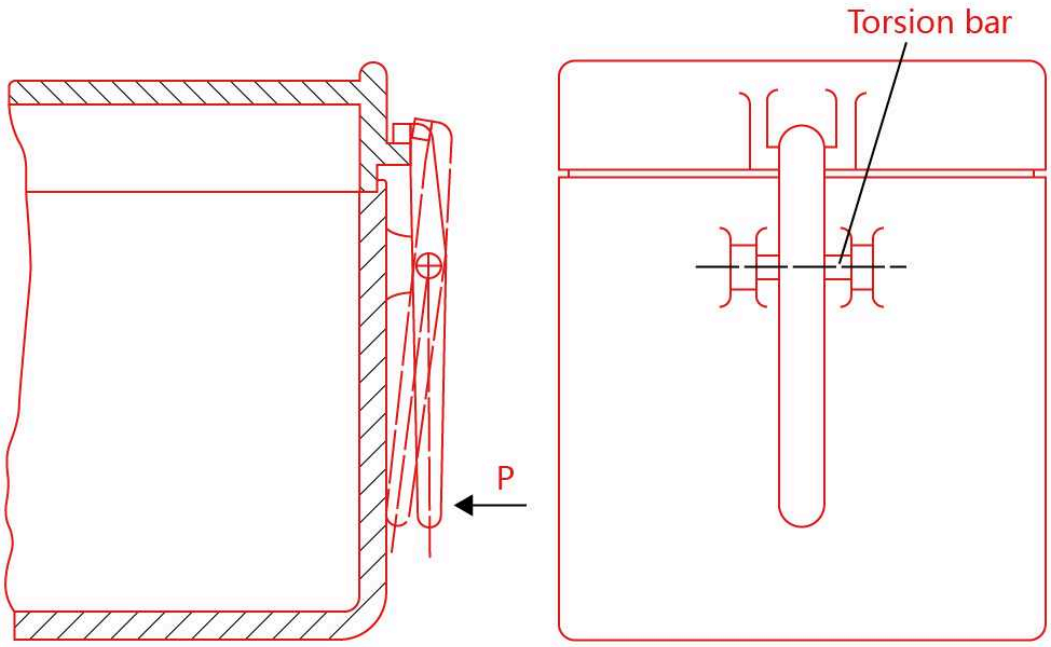

Figure 41. Torsional snap-fits use rotational deformation instead of beam bending

This design is common in rocker switches, push buttons, and closures where rotational movement is required rather than linear deflection.

How to Approach the Calculation

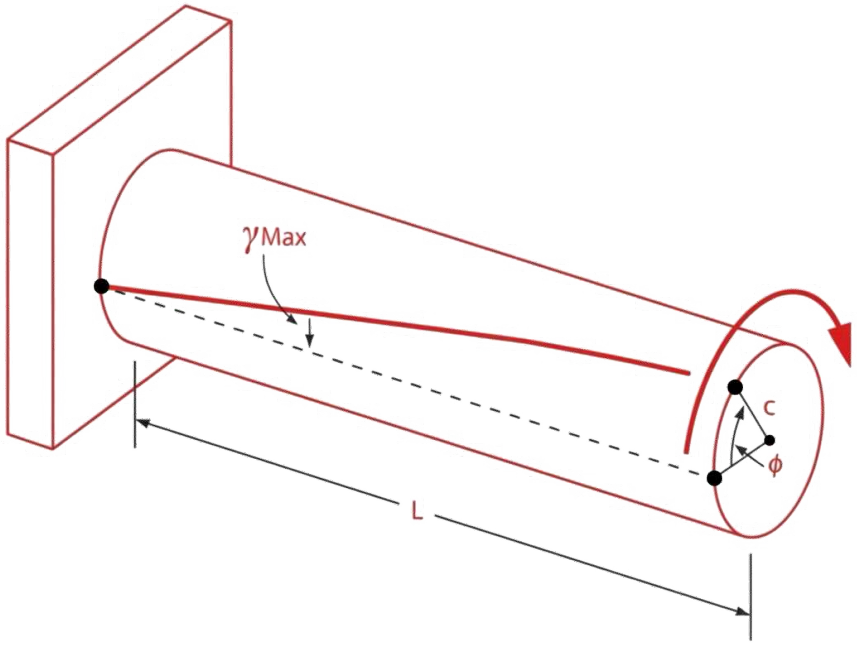

Figure 42. Torsion bar twist parameters

For a torsion bar with a circular cross-section, the controlling parameter is shear strain caused by the angle of twist:

$$\gamma = (\varphi \times c) / L$$

where φ is the twist angle (radians), c is the radius of the torsion bar cross-section, and L is the torsion bar length.

The design goal is to keep shear strain within the material's allowable range for the expected number of cycles.

The main design levers are similar to cantilever snap-fits but apply differently: increasing torsion bar length reduces strain for a given rotation, while reducing the cross-section lowers the required twisting force. When a torsional snap-fit is overstressed, the usual solutions are a longer or more flexible torsion element rather than adding material.

Recommended Parameters

Undercut Type	Guideline
Torsion bar cross-section	Keep small relative to the driven lever to reduce strain
Torsion bar length	Maximize length where space allows
Typical rotation angle	3°–8°, depending on geometry and function
Transition fillet	0.5T–1.0T at bar-to-wall and bar-to-arm transitions

Practical Guidelines

- **Do not apply cantilever snap-fit calculations directly.** A torsional snap-fit fails through shear strain, not bending strain.
- **Keep the torsion bar geometry consistent along its length.** Sudden thickness changes concentrate deformation in local areas.
- **Add generous fillets where the bar connects to fixed supports and the moving arm.** These transitions carry the highest stress.
- **Allow sufficient clearance around the rotating section.** Adjacent ribs or walls can increase friction and actuation force.

Annular (Ring) Snap-Fits

An annular snap-fit uses a continuous circular ridge or groove that engages with a mating feature around the circumference — the classic example is a cap snapping onto a bottle.

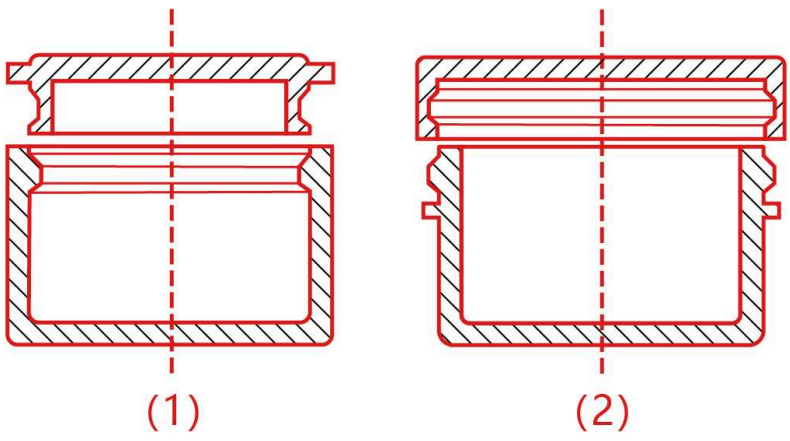

Figure 43. Two common annular snap-fit configurations

Unlike a cantilever snap-fit, where one arm bends to create the required deflection, an annular snap-fit relies on radial expansion or contraction of the ring as it passes over the mating undercut. Once the feature clears, the ring returns toward its original shape and locks into position.

How to Approach the Calculation

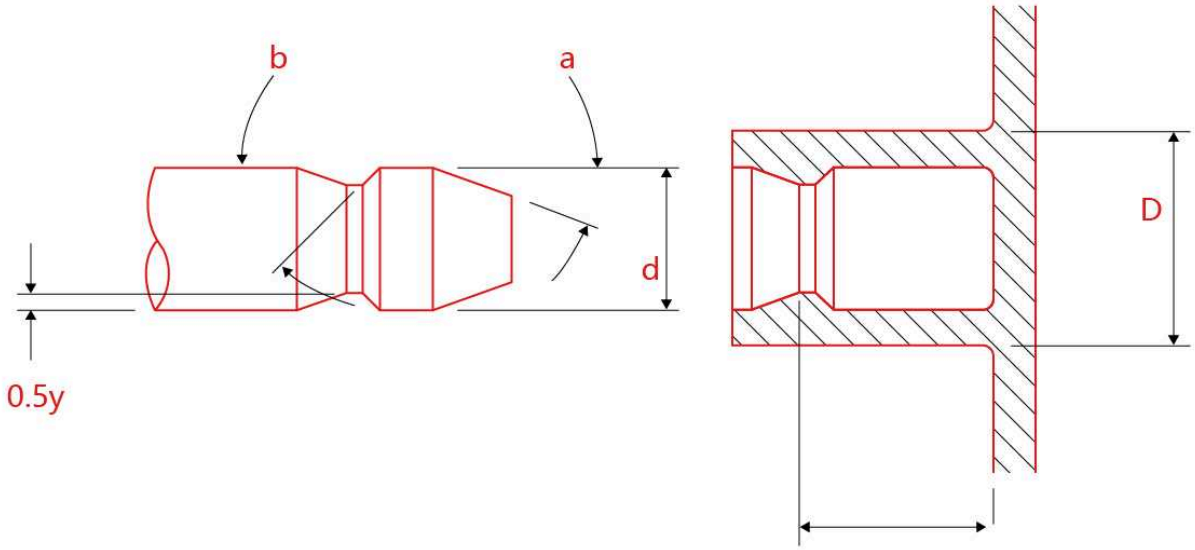

Figure 44. Annular snap-fit interference and angle parameters

The primary design variable is the radial strain required for the annular feature to pass through the mating opening. This is governed by the diametrical interference between the snap feature diameter (d) and the mating hole diameter (D), and can be approximated as:

$$\varepsilon \approx (d - D) / D$$

where the total interference is:

$$y=d-D$$

In a symmetric design, this interference is often assumed to be shared between the two mating parts, with each side deflecting by approximately half of the total displacement, shown in the diagram as 0.5y.

The entry angle (b) controls the assembly force required to push the feature into the opening, while the return angle (a) influences the release force after engagement. Neither angle directly affects the strain calculation, but both should be considered together with d and D after confirming that the required deformation remains within the material's allowable strain limit.

Once the feature clears the opening, the joint returns toward its original shape and locks into position.

Recommended Parameters

Undercut Type	Guideline
Undercut depth (relative to ring diameter)	Typically ≤3–5% for solid rings in rigid resins; higher values may be possible with segmentation or flexible materials
Ring wall thickness	Similar to nominal wall thickness; avoid unnecessary thickening
Typical rotation angle	Consider slots or gaps when stiffness or assembly force becomes excessive
Lead-in chamfer	30°–45° to reduce insertion force

Practical Guidelines

- **Evaluate strain around the entire ring, not only one section.** Annular snap-fits fail through excessive circumferential strain rather than localized bending.
- **Add slots when a solid ring becomes too stiff.** Reducing ring stiffness is often more effective than changing material.
- **Use lead-in chamfers on both mating features.** A smooth entry reduces assembly force and prevents localized damage.
- **Match undercut depth to material flexibility.** Rigid resins generally require shallower undercuts than flexible materials.

Text, Logos, and Identification Features

Text, logos, and identification features are raised or recessed characters, symbols, and graphics molded directly into a part's surface — such as part numbers, brand marks, warning symbols, or regulatory markings. Because these features are created by the cavity and core surfaces of the mold rather than added after molding, they are a specialized form of part geometry rather than a separate marking process.

This is why they belong in part design, while processes such as pad printing and laser marking are covered later under secondary operations.

Design Considerations for Molded Text and Logos

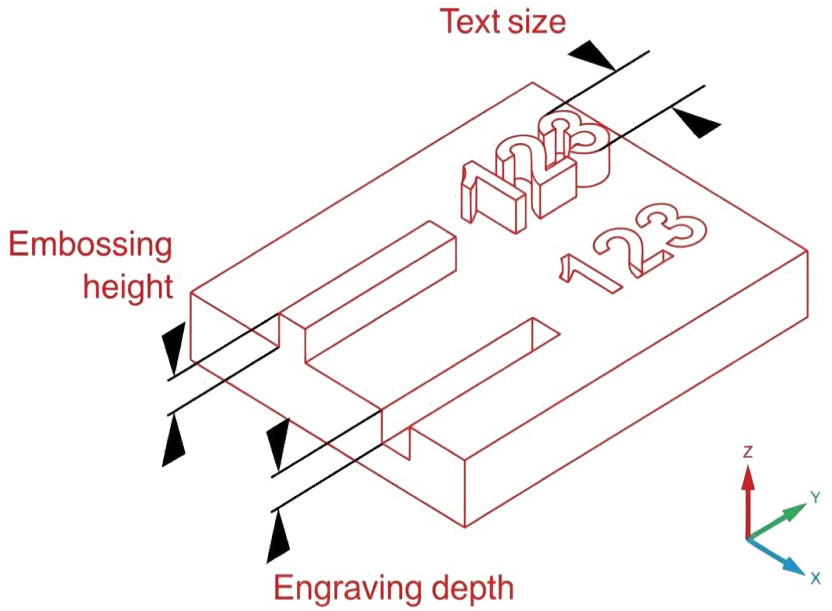

Figure 45. Key dimensions controlling molded text quality

The first decision is the direction of the feature: raised (embossed) text sits above the surrounding surface, while recessed (engraved) text is cut below it. This choice is not purely aesthetic — it also changes how the feature is created in the mold. Recessed text is typically machined into the mold surface that forms the part face, making it the more common and straightforward approach. Raised text requires the surrounding area of the mold surface to be removed so the characters remain standing, which generally requires additional machining effort and can increase tooling complexity.

Character size and stroke width have the greatest influence on moldability. A stroke that is too thin relative to its depth may not fill consistently, while fonts with sharp internal corners or tightly packed details can create the same flow and stress concentration issues discussed in the Corners section.

Small serifs, narrow gaps, and overly detailed characters are common problem areas. As a general starting point, stroke widths of around 0.2–0.3 mm or larger and character heights of approximately 1.5–2× the stroke width help maintain reliable filling and readability after molding and any subsequent surface treatment.

Draft applies to molded text just as it does to other vertical features. Although the dimensions are small, text walls parallel to the mold opening direction still require sufficient taper to reduce friction during ejection. Without adequate draft, fine lettering can drag against the mold surface, causing incomplete release, edge damage, or loss of detail.

Recommended Parameters

Parameter	Guideline
Stroke width	≥ 0.2–0.3 mm (depending on resin, texture, and molding conditions)
Character height-to-strokeratio	≥ 1.5–2:1 for reliable filling and readability
Recess/emboss depth	Around 0.1–0.4 mm as a starting range; keep shallow relative to wall thickness to avoid sink read-through
Draft on character walls	Follow general wall draft guidelines; typically around 0.5°–1.5° for small molded text
Font style	Simple sans-serif fonts are preferred; avoid tight serifs, thin strokes, and narrow gaps
Corner treatment on characters	Use small radii at sharp internal letter junctions where the font design allows

Practical Guidelines

- **Prefer recessed text over raised text unless embossing provides a specific functional or visual benefit.** Recessed features are typically simpler to tool and less prone to damage.
- **Use simple, moderately bold sans-serif fonts.** Thin strokes, tight spacing, and decorative details may not reproduce reliably in molded plastic.
- **Keep recessed depth shallow and proportional to the surrounding wall thickness** to avoid sink read-through on cosmetic surfaces.
- **Place identification features away from critical cosmetic areas when possible,** and consider their relationship with parting lines, gates, and weld lines.
- For parts requiring painting or plating, **confirm text depth and stroke width with the finishing process in mind,** as coatings can reduce fine detail definition.

Tolerances

Every feature covered in this chapter — from wall thickness and corners to ribs, holes, and threads —has its own design guidelines. But one question remains: how precisely can these features actually be produced in a real molding process?

This section is placed at the end of the chapter deliberately. Unlike a rib thickness or corner radius, tolerance is not a feature that can be chosen independently. It is the result of many factors already discussed, including material shrinkage, wall thickness variation, part size, feature geometry, and mold construction capability.

A tolerance that is easily achievable on a small, uniform-wall PC part may be unrealistic on a large glass-filled nylon component with the same nominal value. Understanding these limitations helps designers set realistic requirements before tooling begins.

General vs. Precision Tolerances

Standard (commercial) tolerance is the default capability of a molded part without additional tooling or process control. A tolerance around ±0.2 mm is often a practical starting point for general injection molded dimensions, depending on part size, material, and geometry.

Precision tolerances — sometimes approaching ±0.025 mm — are possible, but they require significantly tighter control. They may involve more precise mold construction, better shrinkage control, controlled processing conditions, and additional inspection throughout production. These additional controls increase tooling and production costs, so tighter tolerances should be reserved for dimensions where they provide a clear functional benefit.

Injection Molding Tolerance Chart

Dimension type	Typical tolerance
General dimensions	±0.1–0.3 mm
Small precision features	±0.025–0.1 mm
Large molded parts	±0.2–0.5 mm
Hole locations	±0.05–0.15 mm

What Actually Limits Precision

A few factors set the ceiling on what's achievable, regardless of how the drawing is toleranced:

- **High-shrinkage materials.** Semi-crystalline resins like PP and nylon vary more than amorphous resins like ABS or PC, even under identical process control.
- **Long flow paths.** A dimension far from the gate sees more accumulated variation than one close to it.
- **Features spanning a thickness transition.** A dimension crossing a rib, boss, or wall-thickness change inherits the shrinkage behavior of every section it passes through.
- **Mold wear.** Tolerances measured on a new mold drift over production volume — high-wear areas (gates, ejector pins, sliding cores) loosen first.
- **Multi-cavity tooling.** Cavity-to-cavity variation adds on top of within-cavity variation; a tighter tolerance on a multi-cavity tool costs more to hold consistently across every cavity.

What Pushes a Tolerance Tighter

Tighter tolerances are usually justified when a dimension:

- Mates directly with another component.
- Controls alignment, such as boss-to-hole fits or snap-fit engagement.
- Functions as a sealing or bearing surface.
- Uses a material with higher shrinkage variation.
- Spans a long flow length or crosses multiple thickness transitions.

05 Mold Surface Finish Standards

Before discussing specific finishes, one distinction needs to be clear: **surface finish standards such as SPI describe the mold cavity surface, not the molded part itself.**

The mold cavity is the steel surface that is polished, textured, or etched by the toolmaker. The plastic part is simply the impression transferred from that cavity during molding. In an ideal case, a polished cavity produces a polished part and a textured cavity produces a matching texture. In reality, the transfer is never perfectly one-to-one. Resin shrinkage, material gloss, flow behavior, and the ability of a specific grade to reproduce fine details all influence the final appearance.

This distinction matters because SPI grades are often used as if they were appearance guarantees. An SPI A-1 specification tells the toolmaker how the steel cavity should be polished; it does not promise that every molded part will have an identical visual result regardless of material and molding conditions.

However, this does not make finish standards irrelevant. Quite the opposite: they provide the common language that allows designers, toolmakers, and production teams to define finish requirements before the mold is built. A specification like SPI B-2 communicates a clear tooling target; a description like "semi-gloss surface" does not. Understanding these standards helps designers choose appropriate finishes, estimate tooling requirements, and avoid specifying a surface appearance that the material or process cannot realistically achieve.



SPI Finish Scale

The SPI (Society of the Plastics Industry) finish scale is the most widely referenced system for specifying mold surface polish in North America. It divides mold finishes into four main grades — from mirror polishing to textured surfaces — and each grade affects not only appearance, but also how much freedom a designer has when balancing geometry, tooling, and cosmetic requirements.



Figure 46. SPI A-D finish sample board

Grade A — Diamond Buff

Grade A is the highest-gloss finish, created by polishing the mold steel with progressively finer diamond compounds until the surface approaches a mirror finish.

It is mainly used where optical clarity or premium appearance is essential, such as lenses, clearcovers, and high-end cosmetic surfaces. The trade-off is that a mirror surface leaves little room for error: flow marks, sink marks, weld lines, and polishing inconsistencies become more visible rather than being masked by texture.



Figure 47. Grade A finishes require highly polished mold cavity surfaces

Grade B — Paper/Fine Stone

Grade B produces a semi-gloss surface using fine sandpaper or stone polishing rather than diamond compounds. It provides a finished appearance without the extreme reflectivity of Grade A.

For many consumer and industrial parts, this is the practical middle ground: it offers a refined appearance while being more forgiving of minor surface variations.



Figure 48. Grade B provides a semi-gloss finish between mirror polish and matte surfaces

Grade C — Stone

A matte finish produced with a coarser stone than Grade B, leaving a low-gloss, slightly textured surface. Because this finish diffuses light rather than reflecting it directly, it hides minor sink, flowmarks, and light scratches far better than either polished grade — a practical choice on parts where geometry constraints (a boss or rib that can't be fully optimized against sink, for instance) make a flawless surface unrealistic.



Figure 49. Grade C finishes diffuse light and reduce the visibility of minor surface defects

Grade D — Dry Blast / Textured

Grade D uses dry blasting methods such as glass bead or oxide blasting to create a textured surface.

It is often selected for functional reasons rather than appearance alone — improving grip, reducing visible defects, or creating a specific surface feel.

The design consequence is that texture increases friction during ejection. Deeper textures generally require additional draft compared with smooth surfaces, especially on vertical walls (see the Draft section).



Figure 50. Grade D finishes create textured mold surfaces through blasting processes

SPI Finish Reference Table

Class	Grade	Method	Typical Appearance
A	A-1	6000-grit diamond buff	Highest gloss, mirror-like
A	A-2	3000-grit diamond buff	Very high gloss
A	A-3	1200-grit diamond buff	High gloss
B	B-1	600-grit sandpaper	Semi-gloss
B	B-2	400-grit sandpaper	Semi-gloss, slightly less refined
B	B-3	320-grit sandpaper	Light semi-gloss
C	C-1	600-grit stone	Satin / low gloss
C	C-2	400-grit stone	Satin
C	C-3	320-grit stone	Light satin
D	D-1	Dry blast, glass bead	Matte, fine texture
D	D-2	Dry blast, #240 oxide	Matte, medium texture
D	D-3	Dry blast, #24 oxide (or as-machined)	Matte, coarse texture

VDI 3400

VDI 3400 is a European texture standard widely used for molded parts that require a defined surface roughness rather than a simple polish grade. Instead of SPI's letter-based polish categories, VDI uses numeric grades (such as VDI 12, VDI 18, or VDI 33) that correspond to increasing texture depth.



Figure 51. VDI 3400 grades specify increasing levels of mold texture roughness

This makes VDI useful when a project requires a more repeatable texture specification across different mold shops or regions. However, VDI and SPI describe different aspects of a mold surface:

SPI mainly defines polish level, while VDI defines texture roughness. They should be treated as related references, not direct equivalents

Approximate Visual Reference (Not a Direct Conversion)

VDI Grade	Approx. Roughness (Ra,µm)	Rough Visual Range
VDI 12–15	0.4–0.8	Fine satin texture
VDI 18–24	1.0–2.0	Medium matte texture
VDI 27–33	2.5–4.5	Noticeable matte texture
VDI 36–45	5.5–9.0+	Heavy texture

Like SPI textured finishes, higher VDI values generally require more draft because deeper texture increases friction during ejection.

Mold-Tech (MT) Texture Standards

Mold-Tech is a widely used commercial texture library for injection molds, particularly in automotive interiors, consumer electronics, and other appearance-driven products.



Figure 52. Mold-Tech standards define specific texture patterns rather than only surface roughness

Unlike SPI and VDI, which mainly describe finish level or roughness, Mold-Tech specifies **named surface patterns** — such as leather grains, geometric textures, and custom matte effects. An MT texture number gives the texturing supplier a specific pattern reference rather than simply a roughness target.

For parts requiring a recognizable surface appearance, such as a leather-like automotive panel or a textured consumer electronic housing, Mold-Tech provides a more precise way to define the intended look than a general description like "matte texture."

06 Secondary Operations

Everything up to this point has focused on what happens inside the mold: how geometry, material, and mold surface determine the part that comes out of the press. Secondary operations begin after ejection — they are the processes applied to a molded part before it becomes a finished product.

This category is broader than it first appears. It includes surface processes such as painting, plating, and pad printing, which add appearance, branding, or environmental protection beyond what the resin provides. It also includes structural and assembly processes such as ultrasonic welding, heat staking, insert installation, and manual assembly. Some molded parts leave the press ready for use; others require several additional steps before they reach their final form.

Secondary operations also influence part design from the beginning. A boss intended for heat staking, a joint designed for ultrasonic welding, or a surface prepared for coating all require supporting geometry that must be considered before tooling begins. At the same time, every added process increases cost, cycle time, and process variation. The best solution is not always to add a secondary process — sometimes the same requirement can be achieved more reliably through changes to part geometry, material selection, or the molding process itself.



Painting

Painting expands the range of finishes a resin can provide on its own — additional colors, soft-touch surfaces, UV protection, or cosmetic improvement where flow lines and gate marks would remain visible.

It also changes the surface requirements of the molded part. Painted surfaces need enough texture for adhesion and coating flow, so a painted part often uses a lighter SPI polish (such as Grade B or C) rather than a mirror finish. An overly polished surface can reduce paint adhesion instead of improving appearance.



Figure 53. Painting can improve appearance beyond the limitations of the molded resin

Electroplating

Electroplating deposits a thin metal layer, typically chrome, onto a plastic substrate. ABS and plating-grade ABS/PC blends are commonly used because they provide the chemical compatibility and surface quality required for the plating process.

Plating makes surface consistency more critical than in standard molding. Sharp corners, uneven wall thickness, and abrupt geometry changes can produce uneven metal deposition, causing visible differences in brightness or coverage across the part.



Figure 54. Chrome-plated plastics combine lightweight substrates with metallic appearance

Pad Printing and Screen Printing

Pad printing and screen printing apply ink directly onto the molded surface. Pad printing is suited for curved or irregular surfaces, while screen printing is typically used for flatter areas and higher-volume applications.

Both methods require the print location to be considered during design. A smooth, accessible area away from parting lines, deep texture, and sharp curvature provides the most consistent result.



Figure 55. Printed graphics require suitable flat and accessible surfaces

Laser Marking

Laser marking creates permanent markings by altering the surface of the plastic, commonly for logos, serial numbers, traceability codes, and identification marks. Compared with printing, it requires no ink layer and can be applied to smaller or less accessible areas.

The marking quality depends heavily on the resin formulation. Materials with laser-marking additives or suitable pigmentation usually produce sharper contrast, especially for dark or highly cosmetic parts.



Figure 56. Laser marking creates permanent identification directly on molded plastic surfaces

Ultrasonic Welding

Ultrasonic welding permanently joins plastic parts by melting the interface between them through high-frequency vibration. Because the process depends on localized energy concentration, the joint cannot be designed as a simple flat mating surface — it requires features such as an energy director or shear joint to control where melting occurs.



Figure 57. Ultrasonic welding enables permanent assembly of injection molded parts

The welding interface should be considered during part design. Joint geometry, alignment features, and surrounding wall structure all affect weld strength and repeatability.

Heat Staking

Heat staking reshapes a molded plastic post with heat or ultrasonic energy to mechanically capture another component, such as a PCB, bracket, or metal insert. It is widely used when a permanent assembly is needed without adding separate fasteners.

The staking post needs enough material to form a secure head while remaining stable during theforming process. A post that is too small may not create sufficient retention, while excessive height or poor support can cause deformation instead of a clean stake.



Figure 58. Heat staking permanently secures inserts or components using formed plastic posts

Mechanical Fastening (Self-Tapping Screws, Inserts)

Mechanical fastening is used when a joint needs to be opened for repair, maintenance, or replacement. Common approaches include self-tapping screws driven directly into molded bosses and metal inserts installed by heat staking, ultrasonic insertion, or insert molding.



Figure 59. Boss geometry determines the reliability of screw and insert fastening

Both methods depend heavily on boss design. A self-tapping screw requires the boss diameter and wall thickness to match the screw size and material behavior: an undersized boss may crack during installation, while an oversized boss adds material thickness and increases sink risk. Metal inserts require additional support around the boss to withstand installation torque and repeated assembly cycles.

07 Zhongde Custom Manufacturing

Everything in this guide so far has covered how to design a part correctly on paper. Whether that design becomes a reliable production part depends just as much on how the tooling and manufacturing process are handled.

This chapter walks through what happens after you submit your design to Zhongde, following the same path a real project takes from the first drawing review to the finished parts leaving our facility. At each stage, we'll explain not only what we do, but also what information you need to provide and what points are worth your attention before moving forward.

If you're currently sitting on a drawing, a sample, or even just a concept sketch and wondering what happens next, this is that answer — and an open invitation to send it our way.



Step 1 Start From Your Current Design Stage

Not every project begins with a finished CAD file. Some customers come with a production-ready drawing; others start with a physical sample, a rough sketch, or simply a concept that needs to be turned into a manufacturable part.

At this stage, the most important information is not only the geometry, but also what the part needs to do. Which dimensions control assembly? Which surfaces are cosmetic? Which areas carry load or require sealing? Knowing these priorities helps define where the design can be optimized and where it needs to stay unchanged.

Step 2 DFM Review Before Tooling

Before any mold steel is cut, your design goes through a DFM review. This is where potential manufacturing issues are identified while changes are still easy to make.

The review covers the factors discussed throughout this guide: wall thickness, flow length, draft, corners, ribs, bosses, snap-fits, undercuts, and cosmetic surfaces.

Your DFM report will highlight issues such as:

- **wall sections that may cause sink marks or incomplete filling;**
- **missing draft or draft conflicts with the parting direction;**
- **undercuts that require slides or lifters;**
- **cosmetic features that may leave visible marks after molding.**

Each point includes a recommended adjustment. If a change affects a critical fit or functional dimension, that requirement should be confirmed before the design moves forward.

Step 3 Mold Design and Manufacturing

After the design is confirmed, the mold moves into engineering and fabrication. The mold design defines the cavity layout, cooling system, ejection method, and any required mechanisms such as slides or lifters.

After machining and assembly, the mold receives the specified surface finish or texture before trial production begins.

If your part requires a specific SPI grade, VDI texture, or cosmetic standard, this is the point to confirm the final specification. Surface changes after texturing usually require additional mold work.

Step 4 Your First Parts Arrive for Evaluation

The first shots from the mold become your sample parts. This is your opportunity to check whether the physical part matches what was expected from the drawing.

During evaluation, focus on the areas that matter most:

- **measure critical dimensions rather than judging by appearance alone;**
- **test snap-fits, hinges, or load-bearing features under actual use conditions;**
- **review cosmetic surfaces under the lighting where the product will be seen;**
- **test assembly with mating components if the part belongs to a larger product.**

If adjustments are needed, the mold is refined and another sample round is completed until the part meets your requirements.

Step 5 Your Approved Part Moves Into Production

Once the sample is approved, the project moves into mass production. At this point, the focus shifts from refining the design to maintaining consistency across production runs.

Depending on the part requirements, production may involve injection molding, compression molding, casting, CNC machining, insert molding, overmolding, or other processes. If your product combines multiple materials or processes, coordinating these steps together helps reduce variation between components.

Before production starts, it is also the right time to confirm practical details such as:

- **final quantity and delivery schedule;**
- **packaging requirements;**
- **inspection standards;**
- **any documentation needed for your own incoming quality process.**

Step 6 Secondary Processing and Assembly

Some parts are complete immediately after molding. Others require additional operations before they become finished products. These may include painting, plating, printing, welding, insert installation, assembly, or custom packaging.

If your project involves cosmetic finishing, confirm the first completed pieces carefully at this stage. A molded sample can verify geometry, but it cannot always reveal issues related to coating color, adhesion, print alignment, or final appearance.

Step 7 Final Inspection Before Shipment

Before shipment, your order goes through final inspection against the approved sample and agreed specifications.

This is also the last opportunity to confirm details beyond the parts themselves:

- **quantity and packaging method;**
- **labels, barcodes, or documentation requirements;**
- **special handling instructions for your warehouse or assembly line.**

For repeat orders, the approved sample becomes the reference point for future production runs, helping maintain consistency from one batch to the next.

08 About Zhongde

Founded in 1978, Zhongde has spent over 40 years building manufacturing expertise across injection molding, rubber production, casting, machining, and insert/overmolding — with 17 years of export experience serving customers in 100+ countries since 2008. We operate as an on-demand manufacturer, built to take a project from a first drawing through to a finished, shipped product under one roof.

Founded	1978
Factory Area	30,000 sqm
Team	200+ staff, including 12 engineers and 10 QC inspectors
Equipment	300+ machines
Monthly Mold Output	100+ sets
Monthly Production Output	~1,000,000 pieces
Certifications	ISO 9001, SGS, TÜV (company) · RoHS, FDA, CE (product)

What We Make

Our capabilities cover the full path from tooling to finished components:

- **Plastic and rubber molding: injection molding, compression molding, casting, insert molding, and overmolding**
- **Precision manufacturing: CNC machining and extrusion for plastic and metal components**
- **Materials: ABS, PC, PA, PP, PMMA, POM, PVC, PTFE, Silicone, FKM, TPU, TPE, and other engineering plastics and elastomers**

Standard machining and molding tolerances can reach ±0.025 mm, with part sizes up to 2500 × 2000mm. Every mold we build is permanently retained on your behalf — and if a mold wears out, were open it at our own cost.

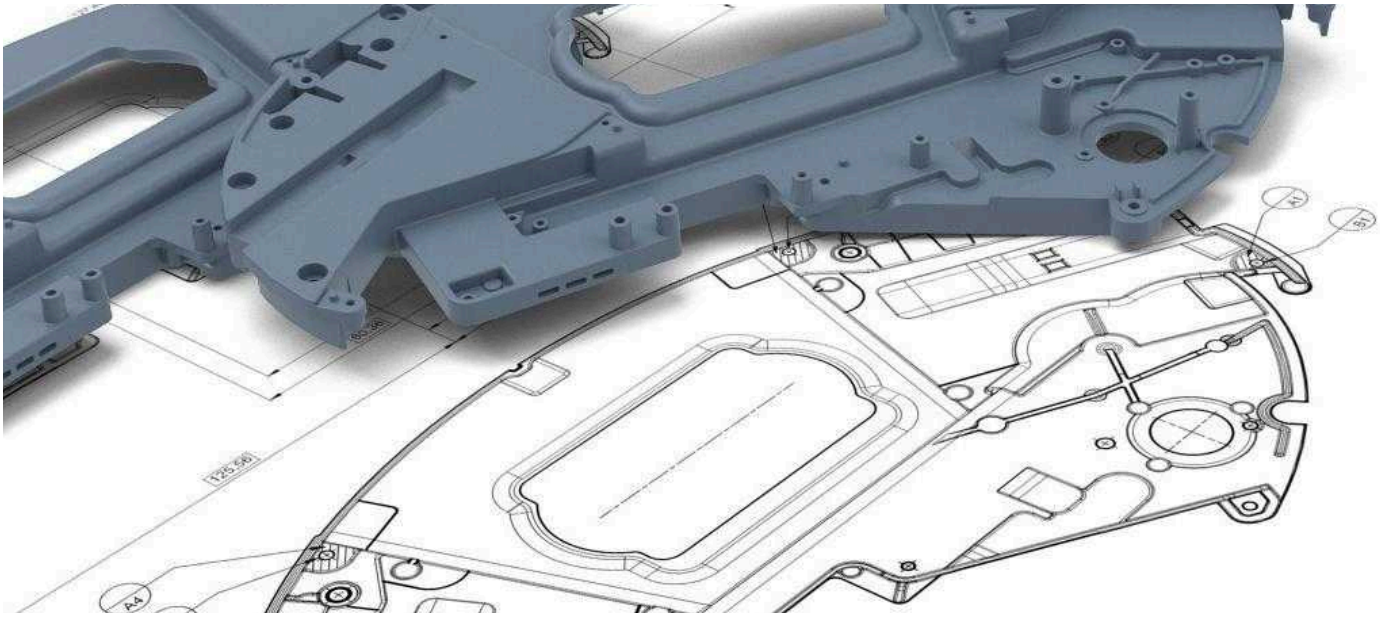

From Design to Production

If you're working through a part design and want it checked before committing to tooling, our engineering team offers DFM feedback to help identify potential manufacturing issues early. This give you a practical starting point for moving from design to tooling and production — reach out to get started.



Getting Started

Minimum order quantity: 1 piece

Payment: T/T, Western Union, L/C, PayPal

Lead time: 30 days for injection molds, 20 days for other mold types; production runs from 20–30+days depending on volume

Rush service available

THANKS FOR WATCHING

EMAIL	TEL	ADDRESS	WEBSITE
sales@zdcpu.com	+86 10 8281 5399	Beijing, China	zdcpu.com



